USER'S MANUAL 990-856
REVISION 6: June 2017

AMADA MIYACHI AMERICA, INC.

INSTALLATION MANUAL

FOR THE

DELTA LASER GLOVEBOX

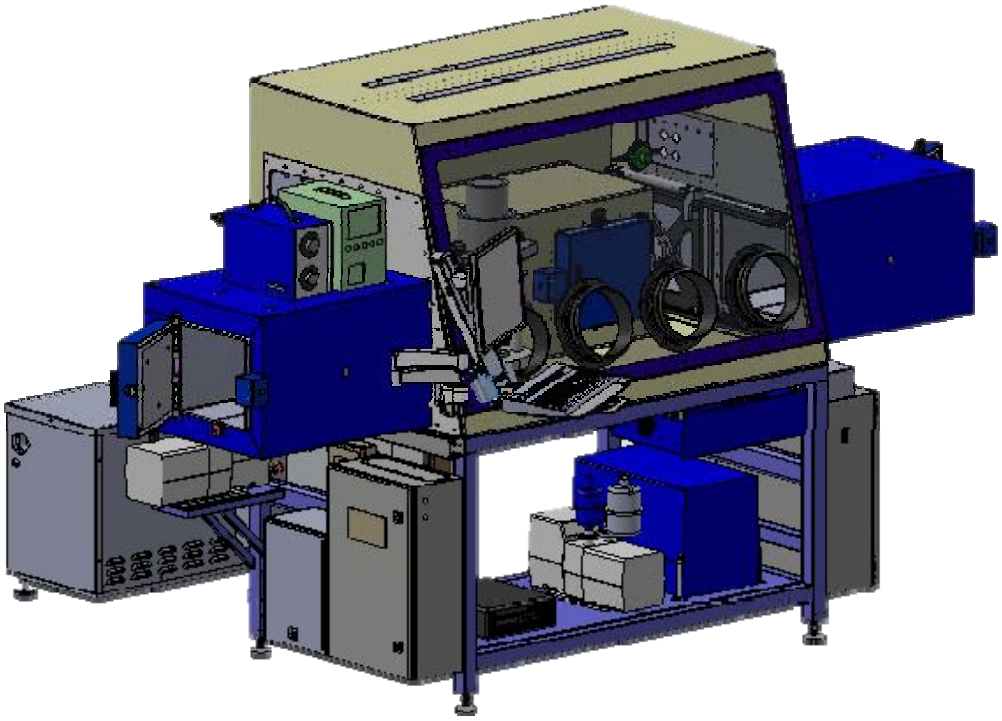

Copyright © 2005-2015, Amada Miyachi America

The engineering designs, drawings and data contained herein are the proprietary work of **Amada Miyachi America** and may not be reproduced, copied, exhibited or otherwise used without the written authorization of **Amada Miyachi America**.

Printed in the United States of America.

REVISION RECORD

Revision	EO	Date	Basis of Revision
1	N/A	08/06	Engineering Release
2	N/A	08/06	Changes for universal features
3	N/A	12/07	QC Document Review
4	N/A	04/09	Changes Per QA
5	N/A	01/15	Update to Amada Miyachi America name and logo
6	N/A	06/17	Updated for newer Class IV control box and Gantry

FOREWORD

Thank you for purchasing the Delta Glovebox Laser Workstation. If you have any questions about the contents of this manual, or find any errors or omissions, please notify Amada Miyachi America at:

Amada Miyachi America
Laser and System Service Department
1820 S Myrtle Ave
Monrovia, CA 91017-7135
Phone: (626) 303-5676
Fax: (626) 358-8048

E-mail: info@amadamiyachi.com

WARNING

This instruction manual describes how to perform procedures on lasers. These procedures MUST be performed as detailed by QUALIFIED and TRAINED personnel.

Procedures not performed as prescribed in this manual may expose personnel to laser radiation hazards.

Be sure to wear protective goggles having an optical density of at least 6 at a wavelength of 1064 nanometers.

CDRH COMPLIANCE STATEMENT

The Amada Miyachi America laser workstation is certified to be fully compliant with all applicable standards and regulations as set forth by the United States of America's Health and Human Services (HHS), Food and Drug Administration (FDA), Center for Devices and Radiological Health (CDRH), standard 21 CFR 1040.10 for Class I laser devices

WORK STATION LASER SAFETY

The Delta Glovebox Laser Workstation is designed to meet CDRH standards at the YAG 1064 nanometer wavelength, which requires eye protection, by users.

A laser welding system has three parts: the laser welding power supply, the optical fiber, and the focusing head. The laser radiation is divergent when it exits the fiber. The focusing head collimates the radiation with the first lens (or set of lenses), then the second lens (or set of lenses) focuses the laser radiation on the workpiece. Laser radiation reflecting from the workpiece is again divergent and the energy density of the laser beam is reduced. The following illustration shows a typical configuration.

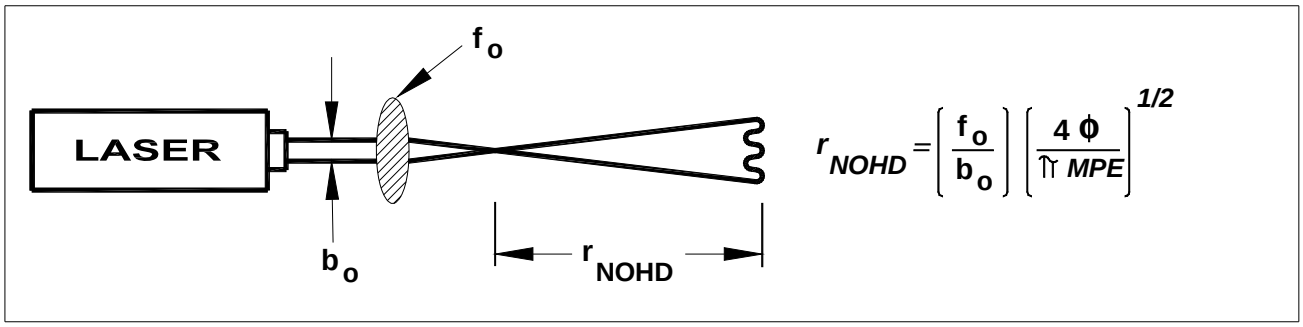

Figure 1. Laser Radiation Divergence

The following tables were calculated assuming worst-case conditions:

- The laser is operated at maximum power
- The laser is operated at maximum repetition rate
- Laser radiation strikes the viewing window in the shortest path after reflecting from the workpiece
- Reflectivity from the workpiece is 100%

Table Instructions:

- Determine the diameter (mm) of the focusing unit lens output
- Determine the focal length (mm) of the focusing unit output
- Determine the laser power supply model number or maximum output power rating
- Multiply the required distance times the focal length

Compare the resultant value with the actual path distance from the workpiece to the window.

Laser Safety Labels (See Figures Included)

The following safety labels are mounted on the workstation as shown:

A, B, C

Standard Laser Safety Symbol (Triangle)
Label A is the smallest; Label C is the largest

D

DANGER
VISIBLE and/or INVISIBLE LASER RADIATION WHEN OPEN AND INTERLOCK FAILED OR DEFEATED. AVOID EYE AND SKIN EXPOSURE TO DIRECT OR SCATTERED RADIATION

E

DANGER
VISIBLE and/or INVISIBLE LASER RADIATION WHEN OPEN. AVOID EYE AND SKIN EXPOSURE TO DIRECT OR SCATTERED RADIATION

NOTE: The same laser safety labels shown mounted on the right-hand side of the workstation are also mounted on the left-hand side.

User Maintenance

WARNING: The GLOVEBOX Series Workstations have been manufactured and tested to meet standard CDRH 21, CFR 1040.10, Class I accessible emission limits. If you suspect a light leak, DO NOT use the workstation until you have consulted with Amada Miyachi Lasers (address, telephone, and e-mail address on front cover). If necessary, we will have you return your unit to us, or send one of our technicians to your site.

CONTENTS

Section I. General Description

Description

The Delta Glovebox Laser Workstation provides for laser welding in an enclosed environment. This includes an electronic bay with control wiring distribution and control system which are detailed in this document. The workstation also includes control pendent, and connection panel.

Workstation Facility Requirements

Electrical: The Delta control module requires 115* VAC, 12 Amps. A power cable is supplied to connect the system to facility power source.

Glovebox Gas: Supplied by customer (¼" dia quick-connect hose connection supplied by MUC). Industrial grade Argon (or Ar/He mix) at 60-100 PSI. (Supplied by customer)

Workstation Components

Interlock Switches: Connector provide on Laser for integration to an Interlock circuit. Refer to laser manual for wiring details. Connector on the control module is not functional for Class IV units.

EMO Button: Pressing this button will disable the laser system and terminate motion. The laser will not operate again until the system is reset.

Power Strip: An external 115 VAC* power strip is supplied with the enclosure. It is provided for auxiliary workstation components.

*** 115 VAC (12 Amps) is typical for North America. 220 VAC is typical for systems installed in Europe, Asia, and Australia. For power service required on Glovebox, reference drawing 109-00293-000 (Benchmark Glovebox Supplement). For power service required on Laser, reference the laser installation manual.**

Glovebox ISO View (Figure 1)
(Typical 4-port glovebox shown)

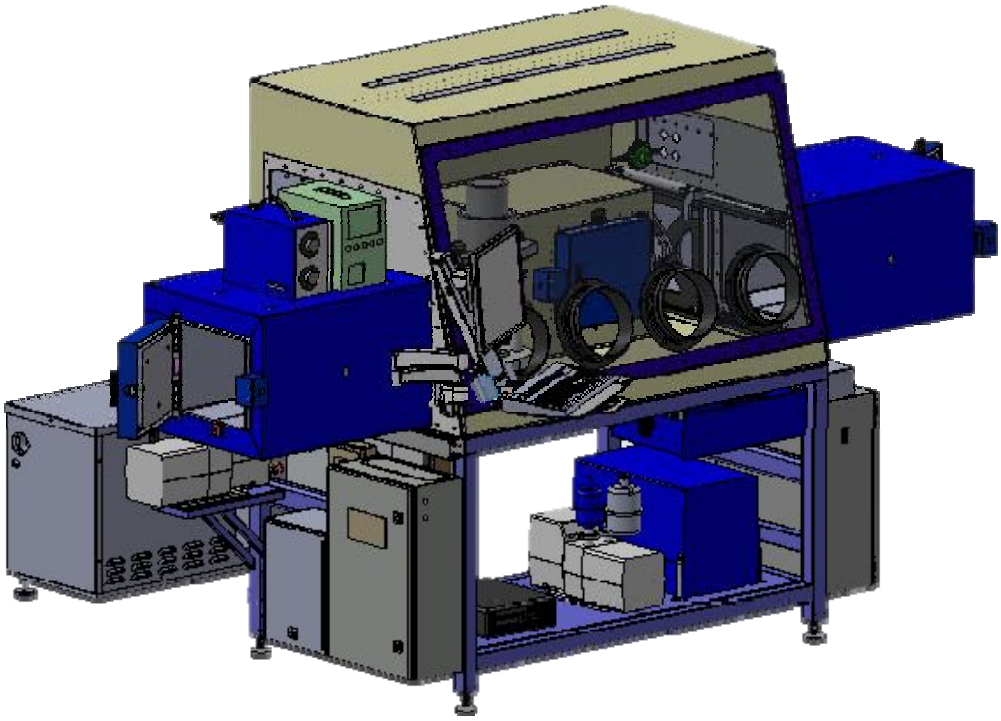

Glovebox End View (Figure 2)

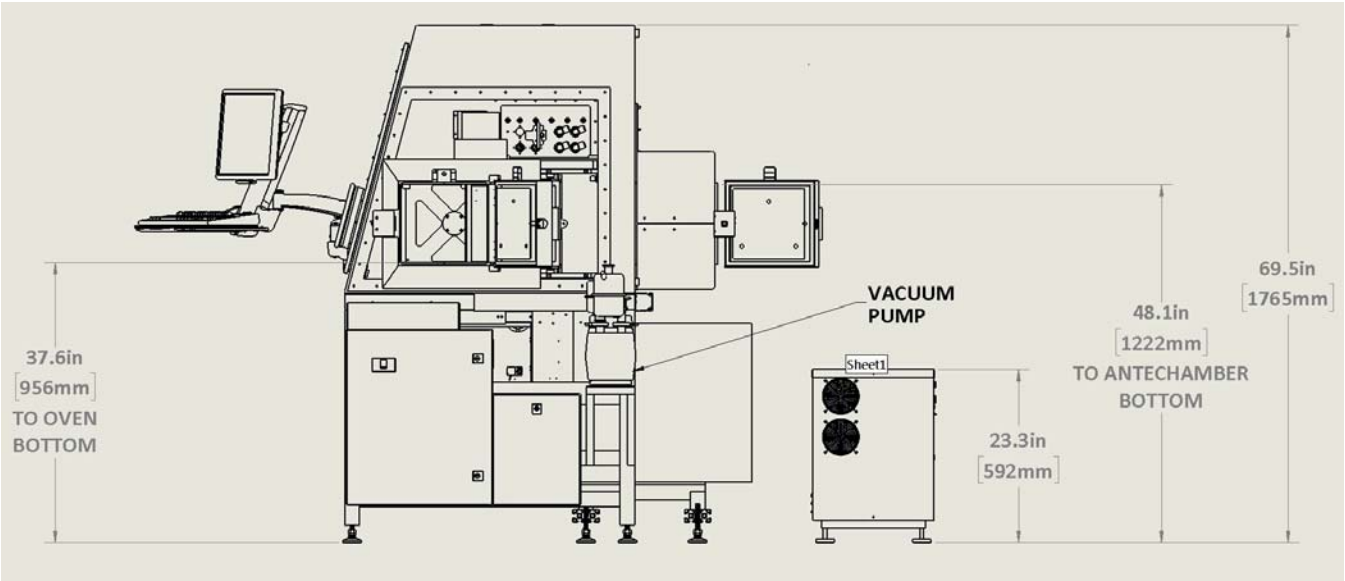

Glovebox Front View (Figure 3) - (Typical 4-port glovebox shown)

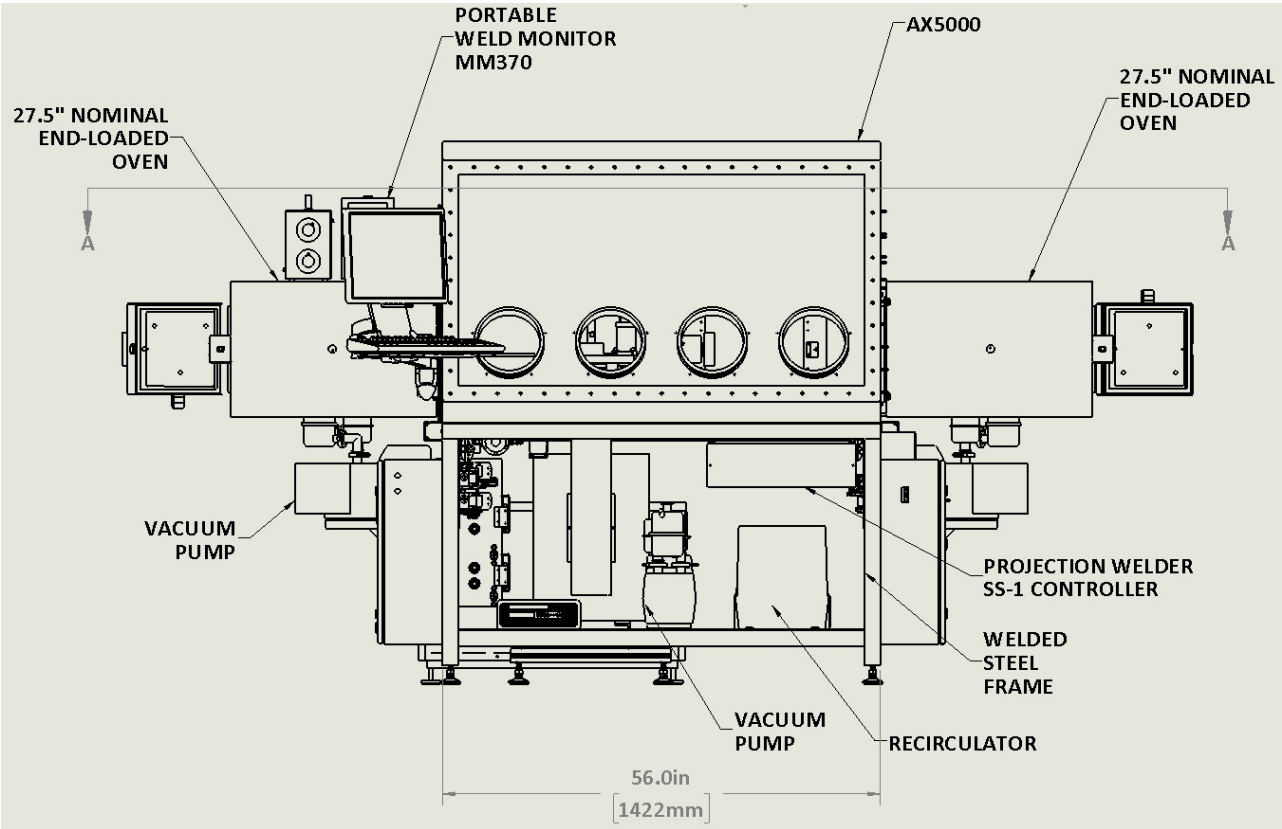

Glovebox Top View (Figure 4) - (Typical 4-port glovebox shown)

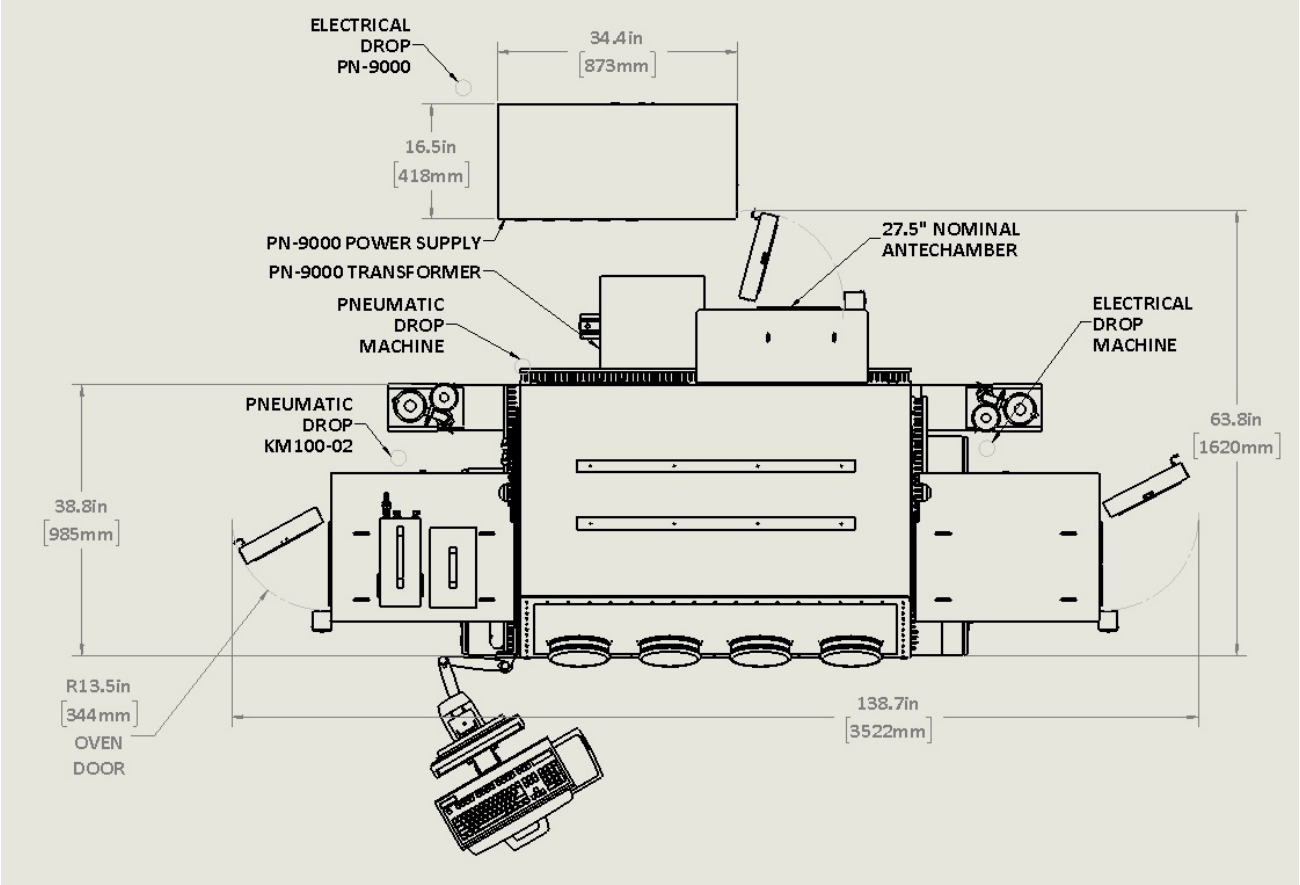

Workstation Facility Requirements

Electrical:

Glovebox Power: 5-wires, 208-240 VAC, 3-phase, 30 Amp, 50/60 Hz (Cable provided).
For P9000 power supply: 208/240 VAC, 1-Phase, 3-wires, 30 Amp, 50/60 Hz (plug and cable provided).

Pneumatic:

Door control: 80 psi min. @ 200 SCFH; 1/4" NPT anchor; 3/8" OD Polyflow tubing provided.
SS1 Weld Controller Pneumatic: 20 min. psi - 120 max. Psi; 3/8" OD min tubing provided.

Gases:

Gas Mixer N2/Ar Pneumatic: 80 psi min-100psi max., 1/4" NPT anchor; 3/8" polyflow tubing provided.
Gas Mixer He Pneumatic: 75 psi min., 188.5 psi max.; 1/4" NPT anchor; 3/8" polyflow tubing provided.

Section II. Components and Figures

Typical Connector Panel (Figure 5)

Some Connectors / Items may be unpopulated, plugged, or not present when they are for options not ordered. Panel appearance will vary from system to system.

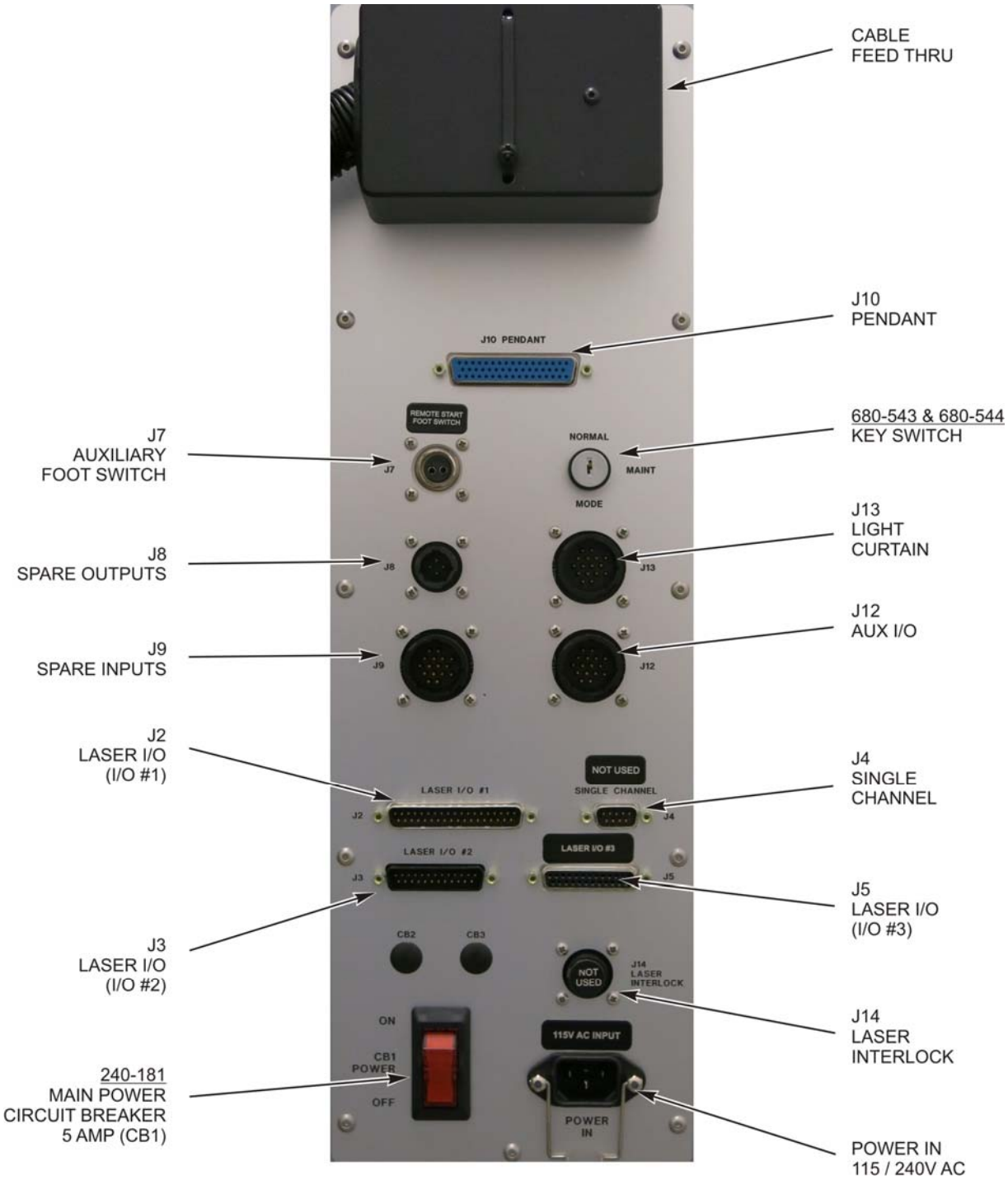

Workstation Remote Control Pendent (Figure 6)

Some jog buttons may not be functional if they are for motion axis not indicated in the order. Pendant appearance may vary from system to system.

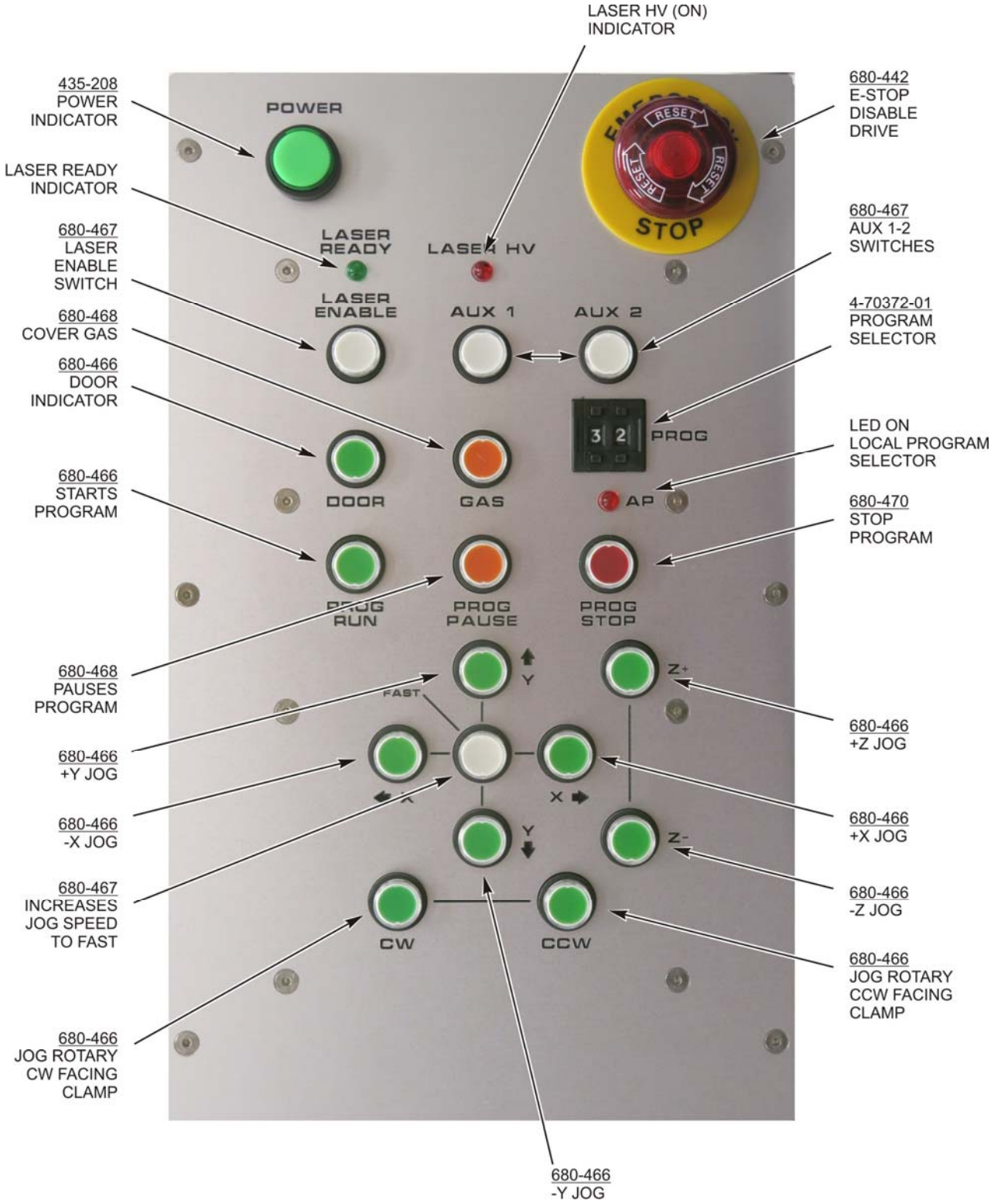

Workstation Control Module (Figure 7)

Some Items may not be present when they are for options not ordered.
Package appearance will vary from system to system.

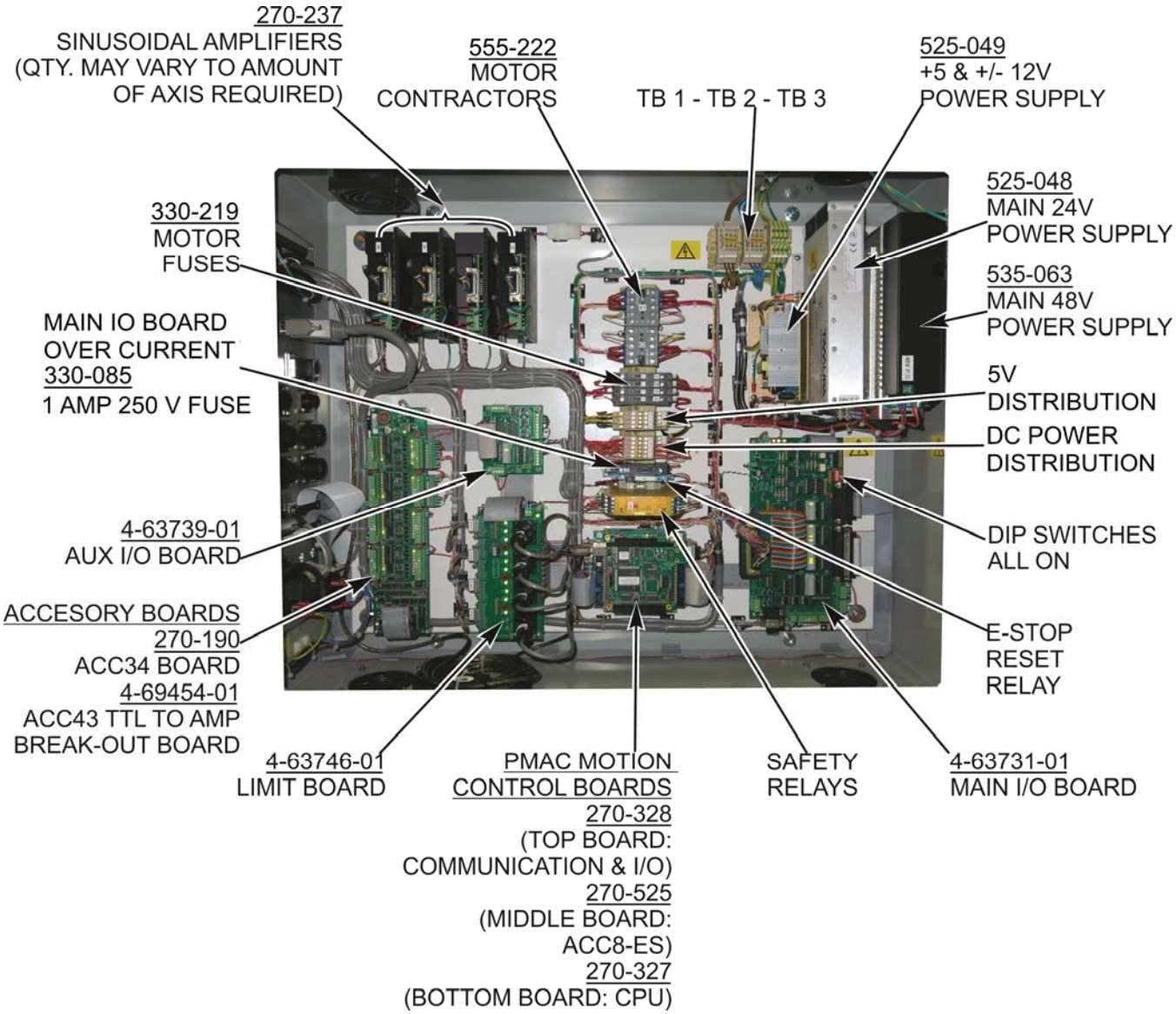

Workstation Control Module Components

Delta Tau PMAC II	Motion Controller
Expansion I/O	I/O expansion for Motion Controller
Input Power Connector	Power input connector for the workstation.
Utility Outlet	Power Outlets for providing AC power to appliances and instrumentation outside of the enclosure.
Circuit Breakers	Protects the power supplies, Delta Motion and misc components from power irregularities.
Laser Interlock Connector	Connector for the laser interlock. Refer to the wiring diagram drawing
Laser Interface Connector	Provides signal interface between the laser and the workstation
5/12/24 Volt Power Supplies	Provide power for the Motion Control and related components.

Glovebox Interior - Typical 4-Axis System (Figure 8)

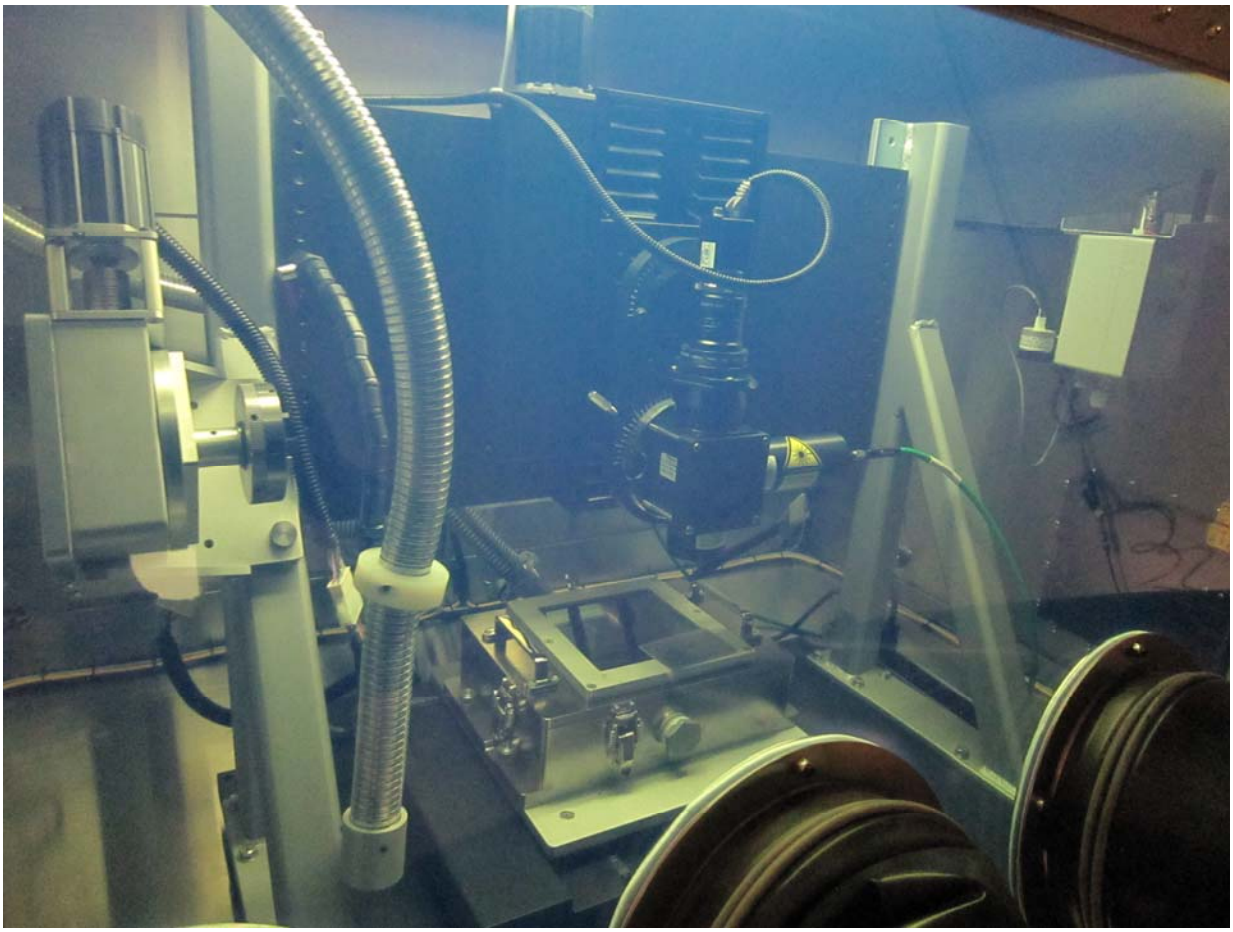

Feed through Plate Components – (Figure 9)

Fiber Optic Cable Entry Ports	These ports provide entry for fiber optic cables. **WARNING:** Do not operate system with the fiber feed through (or any other feed through connector) removed. You could be exposed to dangerous laser radiation escaping through that hole.
Feed Through Plate	This plate contains several feed through connectors for harnessing of the system. The connectors chosen are hermetic or near-hermetic in vacuum sealing quality. Do not use substitute connectors. Do not operate the laser without the plate and all connectors in place.
Fiber Feed Through	Care must be taken in the handling of the fiber. The sheath can be damaged by abusive handling or bending in tight radius. If this occurs, laser safety might not be maintained. The fiber should always be connected at both ends.

Glovebox Rear Feed Through Connections (Figure 9A) **

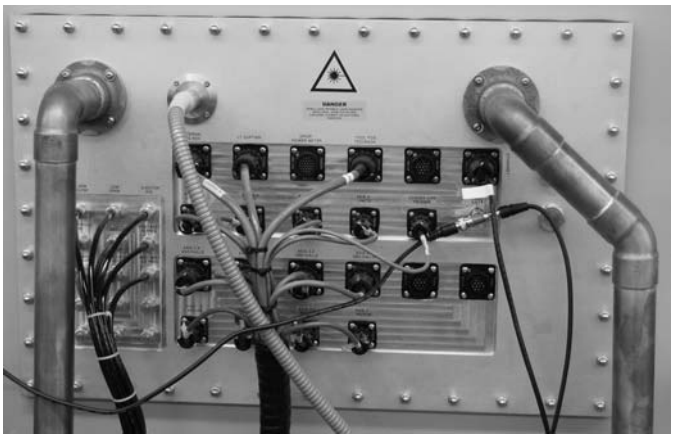

Glovebox Rear Feed Through Connections (Figure 9B) **

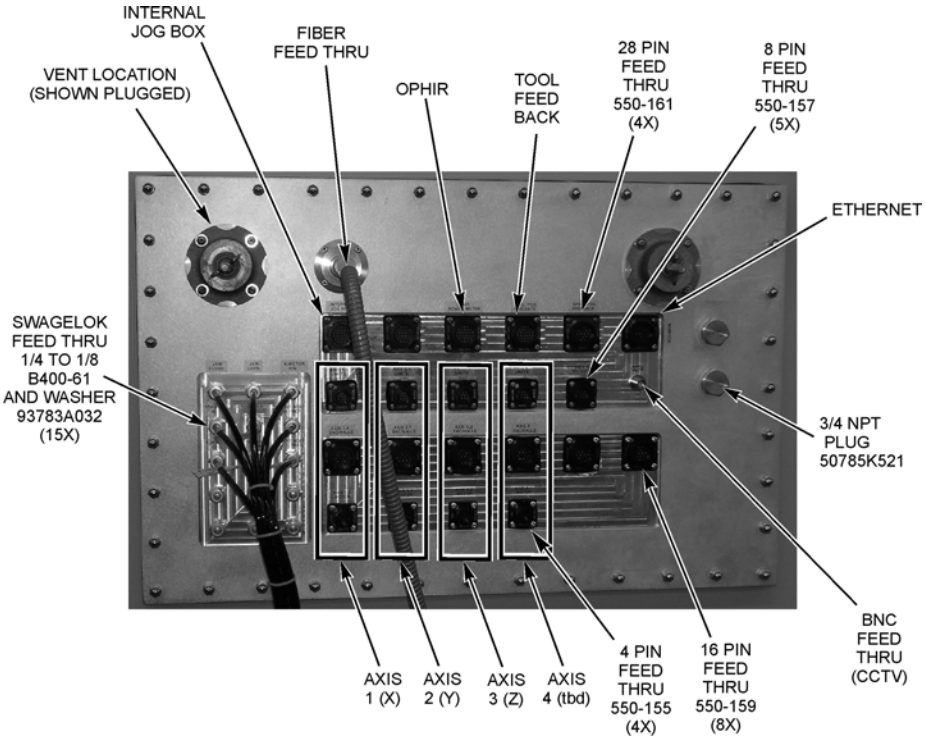

****Some Connectors / Items may be plugged, unpopulated, or not present when they are for options not ordered. Panel appearance will vary from system to system.**

Glovebox Rear Feed Through Connections (Figure 10)

(Appearance will vary from system to system)

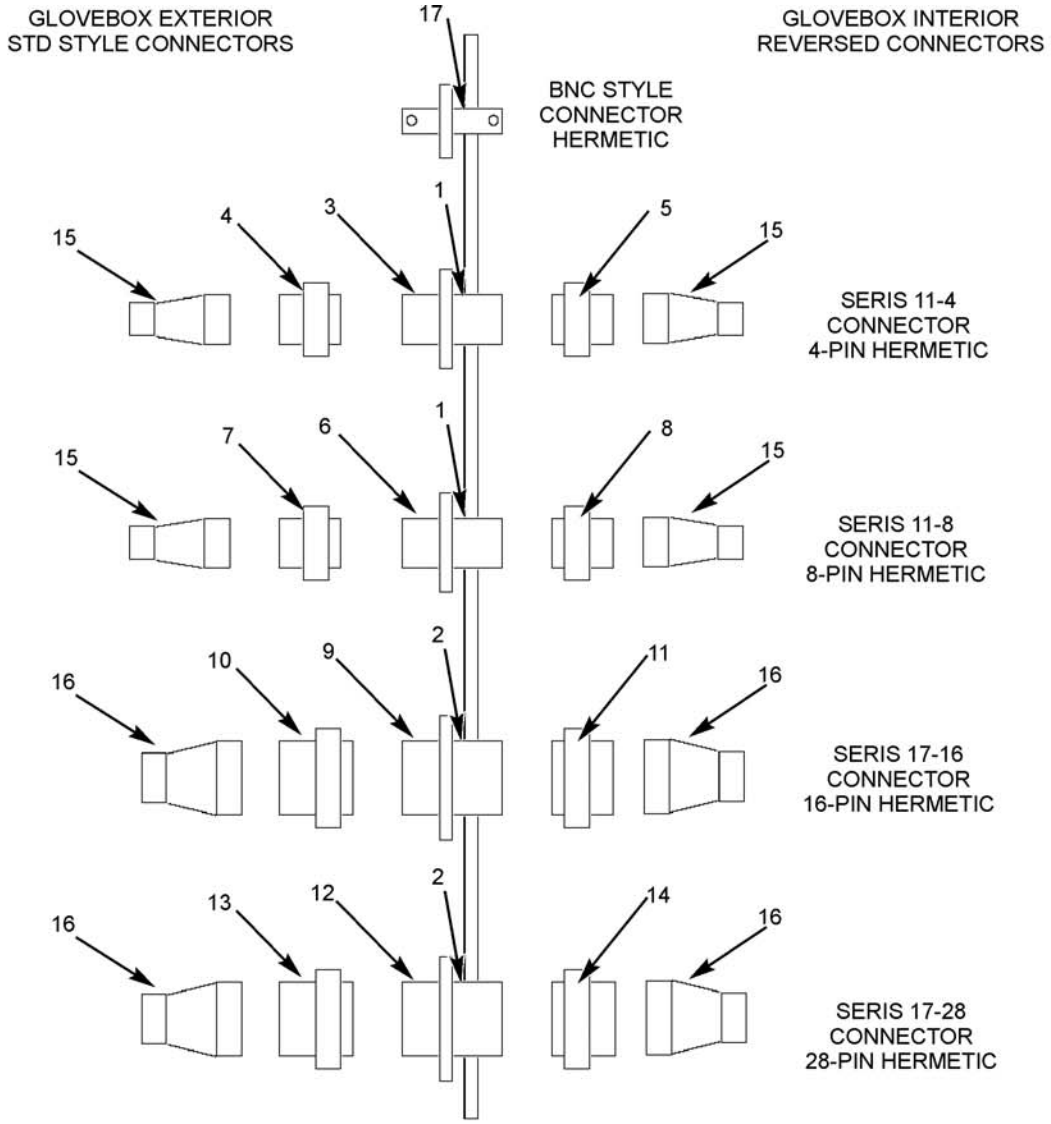

1	055-039	GASKET, SQUARE, AMPHENOL, NEOPRENE, SIZE 11	TYCO / AMP	81665-3	
2	055-040	GASKET, SQUARE, AMPHENOL, NEOPRENE, SIZE 17	TYCO / AMP	81665-2	
3	550-155	CONNECTOR, CIRC, FEEDTHRU, 4 PIN, M-M, CPC SIZE 11-4	TYCO / AMP	206518-2	
4	550-154	CONNECTOR, CIRC, STD PIN,4 PIN, F, CPC SIZE 11-4	TYCO / AMP	206060-1	
5	550-156	CONNECTOR, CIRC, REV PIN, 4 PIN, F, CPC SIZE 11-4	TYCO / AMP	206516-1	
6	550-157	CONNECTOR, CIRC, FEEDTHRU, 8 PIN, M-M, CPC SIZE 11-8	TYCO / AMP	206458-1	
7	550-098	CONNECTOR, CIRC, STD PIN,8 PIN, F, CPC SIZE 11-8	TYCO / AMP	205838-1	
8	550-158	CONNECTOR, CIRC, REV PIN, 8 PIN, F, CPC SIZE 11-8	TYCO / AMP	206460-1	
9	550-159	CONNECTOR, CIRC, FEEDTHRU, 16 PIN, M-M, CPC SIZE 17-16	TYCO / AMP	206552-1	
10	250-425	CONNECTOR, CIRC, STD PIN,16 PIN, F, CPC SIZE 17-16	TYCO / AMP	206037-1	
11	550-160	CONNECTOR, CIRC, REV PIN, 16 PIN, F, CPC SIZE 17-16	TYCO / AMP	206554-1	
12	550-161	CONNECTOR, CIRC, FEEDTHRU, 28 PIN, M-M, CPC SIZE 17-28	TYCO / AMP	206127-1	
13	550-162	CONNECTOR, CIRC, STD PIN,28 PIN, F, CPC SIZE 17-28	TYCO / AMP	206125-1	
14	550-163	CONNECTOR, CIRC, REV PIN, 28 PIN, F, CPC SIZE 17-28	TYCO / AMP	206126-1	
15	245-163	STRAIN RELIEF, CPC SIZE 11 CONNECTOR	TYCO / AMP	206062-3	
16	245-121	STRAIN RELIEF, CPC SIZE 17 CONNECTOR	TYCO / AMP	206070-1	
17	250-483	ADAPTER, BNC, BULHEAD	AMPHENOL	31-220H	
18					
19					

CDRH LABEL PLACEMENT

Left Side Antichamber Door (Figure 11A)

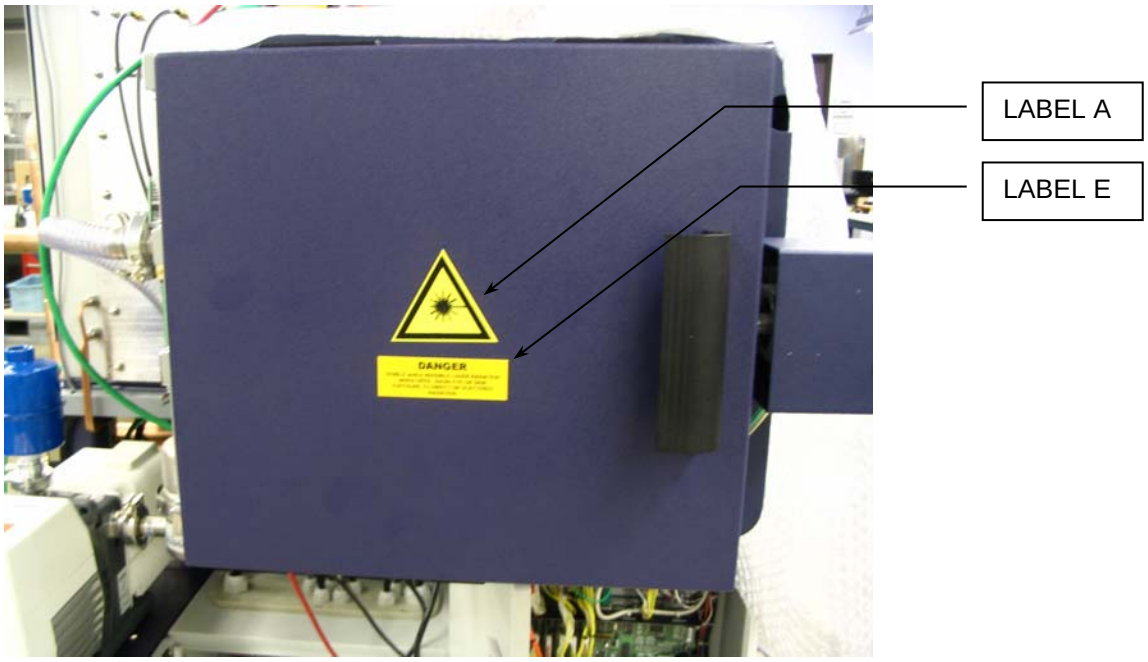

Right Side Antichamber Door (Figure 11B)

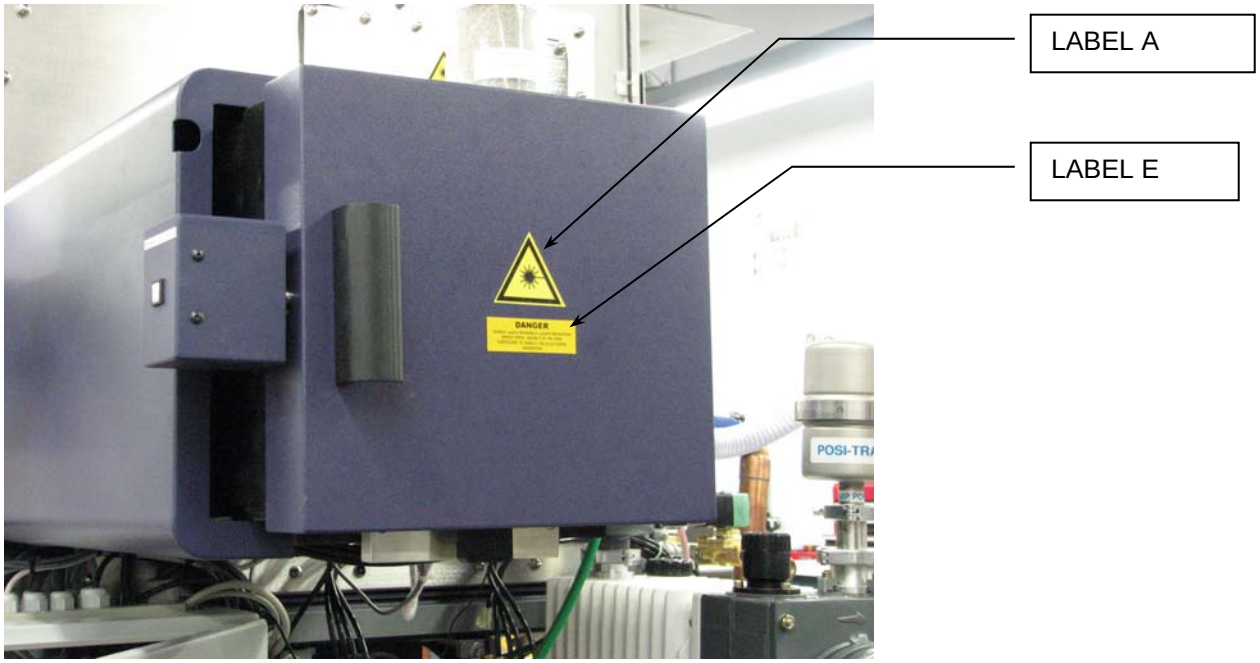

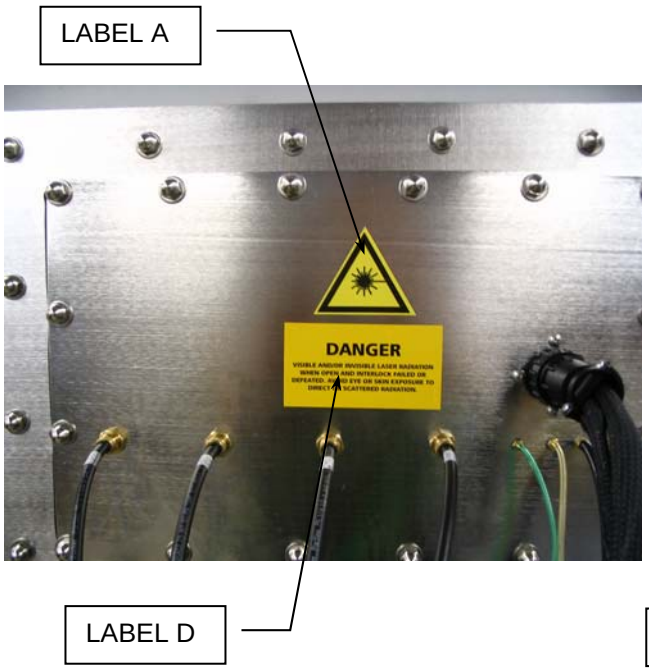

Feed Through Panel -
(Figure 12A)

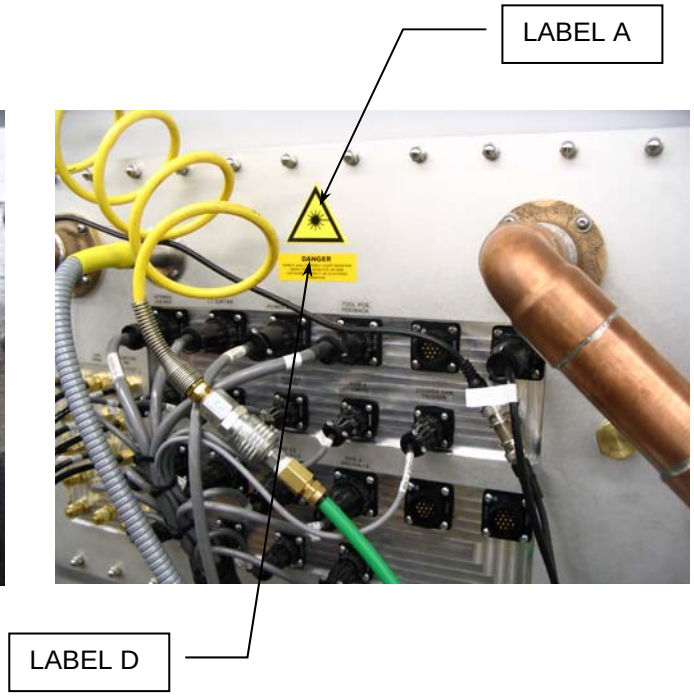

Feed Through Panel - Motion
(Figure 12B)

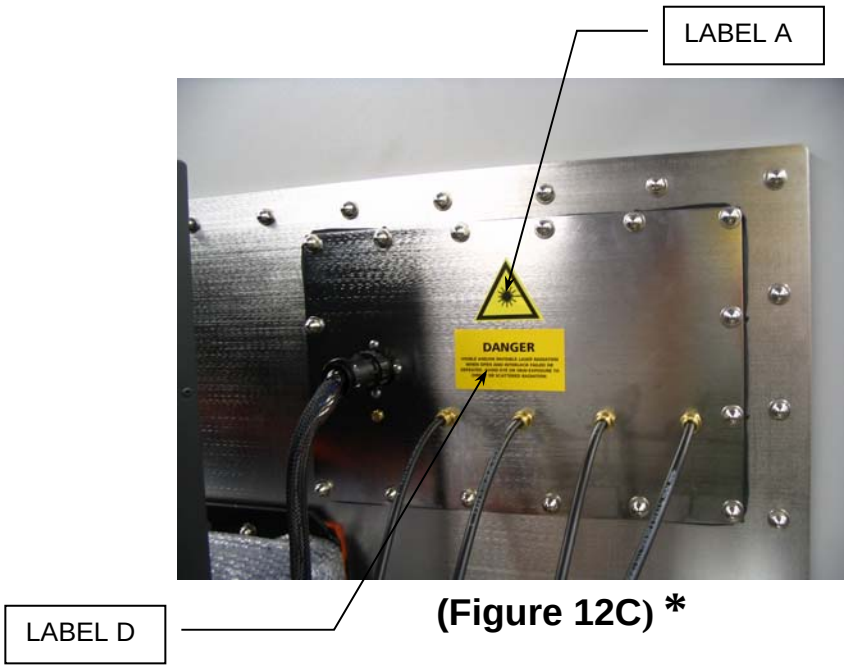

(Figure 12C) *

Front Window, YAG Absorbent (Figure 13A)

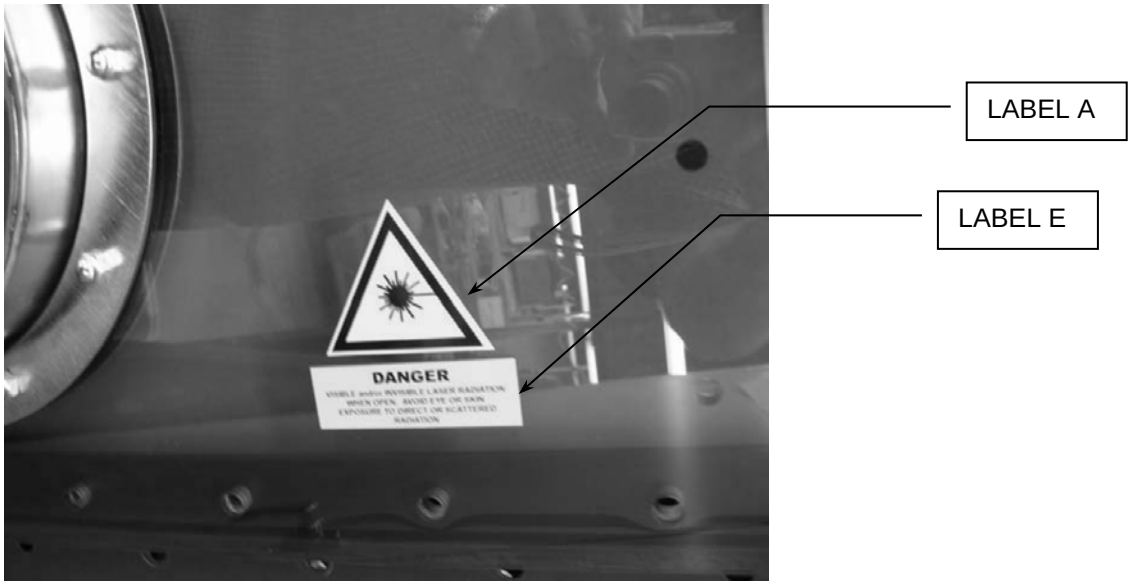

Front Window, YAG Absorbent (Figure 13B)

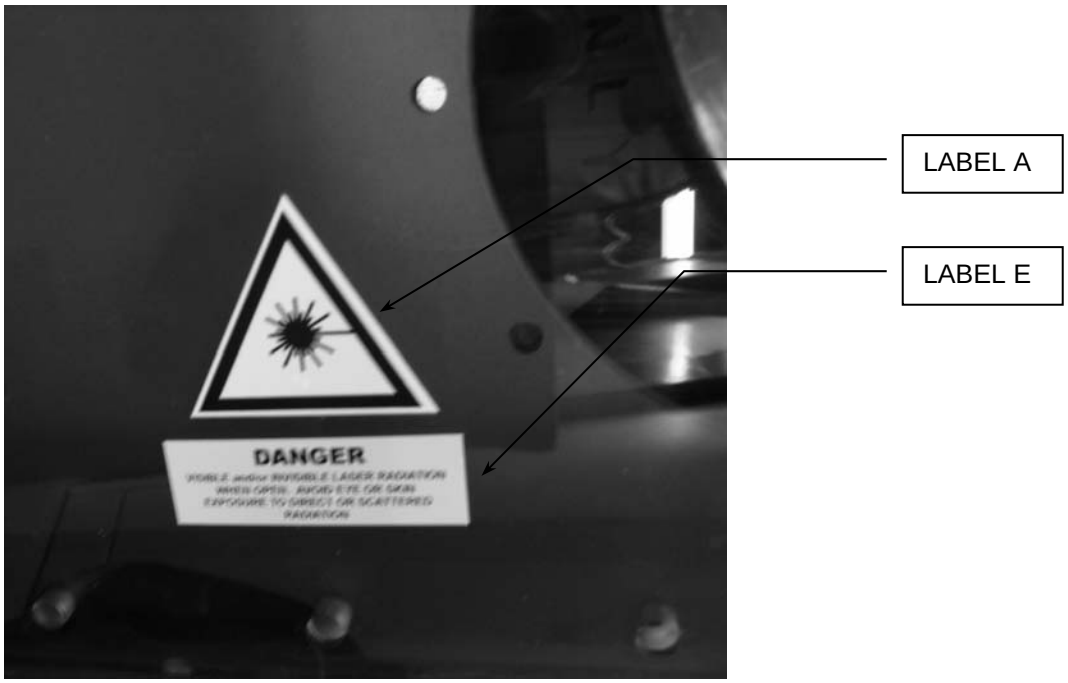

Viewing Window	Window through which you may safely view the welding operation while the laser beam is turned on. **WARNING:** The window is specially treated. (See Specifications.) Do not replace the window with one having a different optical density specification.
Glove Ports	Gloves for insertion of hands into welding space – not interlocked

Emergency Stop and Interlock Wiring Diagram (Figure 14)

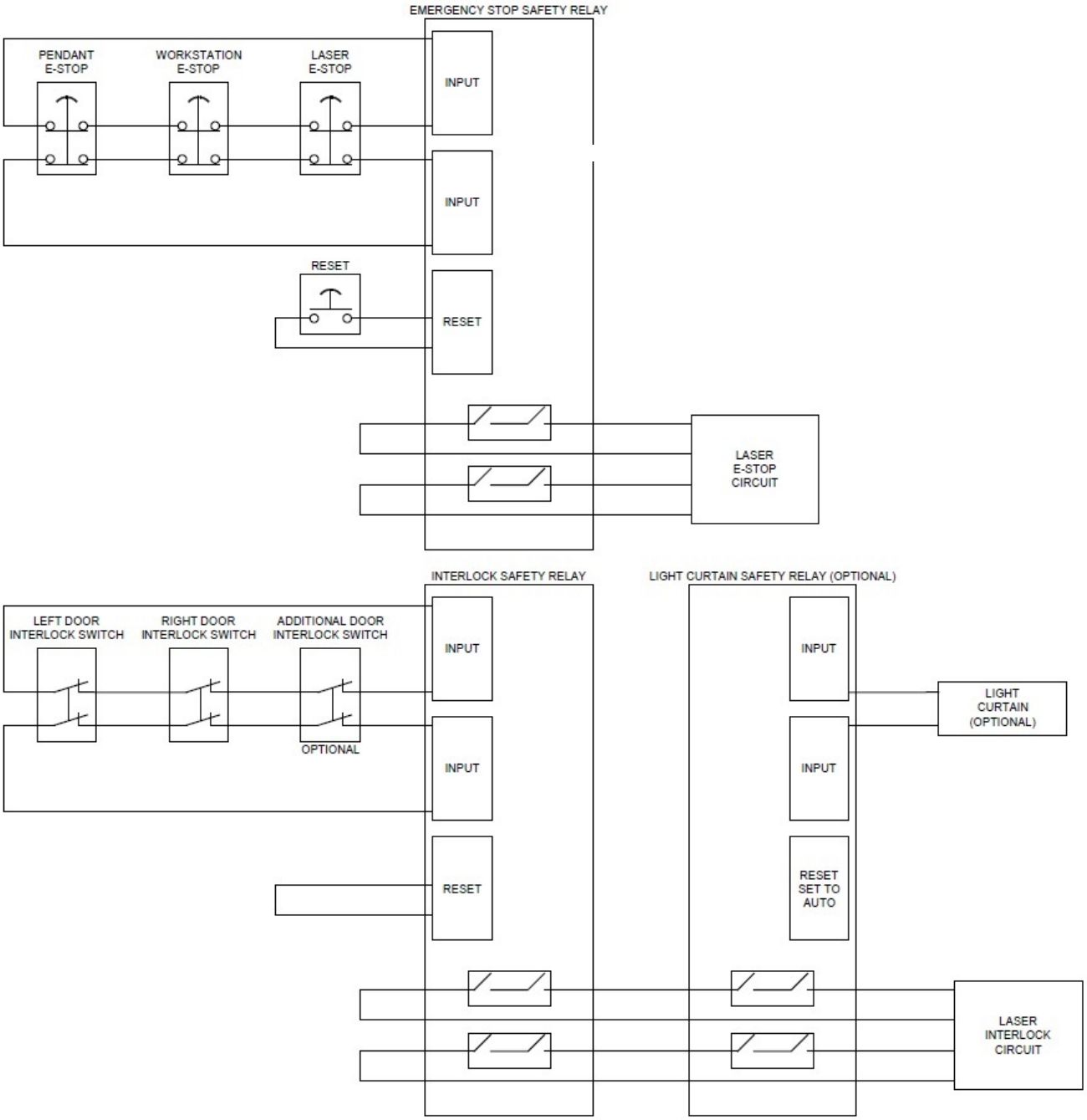

Appendix A Miscellaneous System Components

Pendants:

Internal Pendant, (5-Axis Shown) Figure 15