Purpose

The purpose of this instruction sheet is to define how to configure, set-up and use the Multi-Workstation Interlock and Fiber Breakage Detection circuits in a Miyachi Unitek A-Series Laser Welders (LW50A-600A). The Multi-Workstation Interlock is an optional safety feature used with multiple workstations that protects the end-user from accidentally firing the Laser when a workstation door is opened. Fiber Breakage Detection is an optional safety feature that detects the integrity of the optical fiber originating from the Laser Welder.

Warning

Amada Miyachi America (AMYA) recommends reading through this entire document first, before making any modifications and/or adjustments. Any modification not described in this document may prevent the Laser from functioning properly. AMYA is not responsible for the misuse of the material contained in this document.

Options

These optional safety features are available in two configurations:

- Multi-Workstation Interlock – AMYA # 4-66525-0x
  where "x" indicates the number of optical fiber outputs (2 – 6).
- Fiber Breakage Detection + Multi-Workstation Interlock – AMYA # 8-620-xxxx-xx
  Option includes both the Fiber Breakage Detection and Multi-Workstation Interlock.

Circuit installation is beyond the scope of this document. For detailed information on Installation, please refer to the appropriate Amada Miyachi America Manufacturing Procedure:

Assembly	Assy #	PCB #	MFG Procedure
Multi-Workstation Interlock (**MIL**)	4-66525-0x	4-66563-01	MFG-315
Fiber Breakage Detection (**FBD**)	8-620-xxxx-xx	4-67003-01	MFG-319

Circuit Location

The location of the additional safety features varies among the family of Lasers. However, in all cases the additional **MIL** or **FBD** PCB's will be mounted under the top cover(s). Once the Laser panels are removed, look for either the 4-66563-01 or 4-67003-01 PCB and then follow the configuration and set-up instructions in this document.

REVISIONS				
SYMBOL	DATE	EO NO.	BY	APPROVAL
A	4/7/11	40991	S. LOVELAND	T. HOUY
B	7/5/11	40591	S. LOVELAND	T. HOUY
C	4/9/12	41886	S. LOVELAND	T. HOUY
D	5/22/12	41972	S. LOVELAND	T. HOUY
E	9/17/12	41399	S. LOVELAND	T. HOUY
F	7/17/13	42688	S. LOVELAND	T. HOUY
G	1/13/15		S. LOVELAND	T. HOUY

Basic Laser Welder Safety Feature (*standard issue*)

A typical Laser set-up is shown below. In this example, an *Optical Fiber* connects between the *Laser* and a *Focus Head* located inside a *Workstation*. For maximum safety, each *Optical Fiber* is equipped with its own dedicated user-controlled *Branch Shutter*. The purpose of the *Branch Shutter* is to control the Laser light output, such that when it is closed all Laser light is blocked from transmitting down the *Optical Fiber*.

For maximum protection, a *Workstation Interlock Cable* is connected between the *Interlock Door Switch* in the Workstation and the *Remote Interlock Connector* on the front of the Laser. Whenever the workstation door is opened, the *Interlock Door Switch* "opens" and causes all *Branch Shutter(s)* inside the Laser to close blocking all Laser light. This basic safety feature is equipped on every Laser and prevents the Laser from being accidentally fired while the workstation door is open. By design this Interlock function is designed to be used with one workstation.

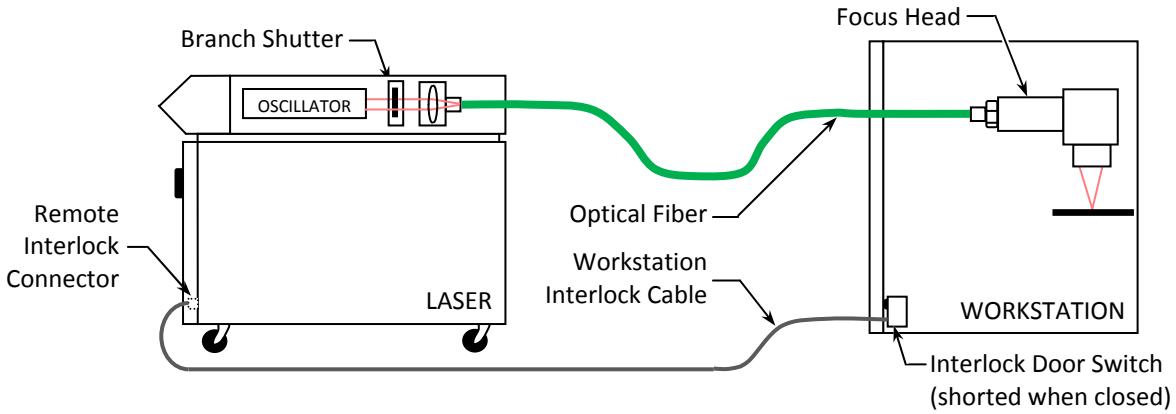

Optional Safety Features

Two drawbacks when using the above safety feature are; (1) if multiple workstations are used or (2) if the Optical Fiber is disconnected, cut, or severed. In both cases, the safety feature explained above may not adequately protect the Laser Operator.

Amada Miyachi America offers simple solutions to both of these problems with (1) the addition of the Multi-Workstation Interlock PCB (hereinafter called **MIL**) which monitors multiple workstations and prevents the Laser from being fired into a Workstation with an open door or (2) Fiber Breakage Detection (hereinafter called **FBD**) which is used to monitor the condition of the optical fiber and also supports the **MIL** function. The configuration for both options are explained in detail below.

Section I. Multi-Workstation Interlock (MIL) - (4-66525-0x)

MIL Configuration: **4–66525 – 0x**

- 2 – 2 Fiber Outputs
- 3 – 3 Fiber Outputs
- 4 – 4 Fiber Outputs
- 5 – 5 Fiber Outputs
- 6 – 6 Fiber Outputs

When a single laser is connected to multiple workstations, the optional **MIL** safety function should be implemented. The last digit in the basic part number (4-66525-0x) defines the number of optical fiber outputs in the Laser, not how many workstations are connected to the Laser. Typically the number of workstations is the same as the number of Time-Shared shutters installed + 1. The maximum number of Fiber Outputs is Laser dependent:

LW50A(C)(E)/70A(C)(E)/150A(E)	- 6 outputs maximum
LW300A(H)(E)/400A(E)/500A(E)/600A(E)	- 4 outputs maximum

To allow for the most flexibility, each *Optical Fiber* output has its own dedicated *Fiber Interlock Connector*.

How MIL Works

Whenever a Laser is given the command to “fire”, the Laser first checks the status of all safety features before firing the Laser. One of the safety checks is to determine the status of the internal *Branch Shutter(s)*. Each *Branch Shutter* provides a hardware feedback signal to show its open/close condition. As long as the open/close status in the microprocessor (μP) is the same as the hardware feedback signal, the safety check will pass.

The **MIL** circuit works by disabling the solenoid drive signal to the *Branch Shutter* such that when the workstation door is open, the shutter will automatically close. Then, if the Laser is given a “fire” command, the open/close status in the μP will not match the hardware feedback signal and the Laser will not fire. A simplified block diagram is shown below for convenience:

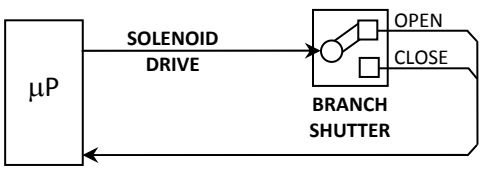

Standard Laser

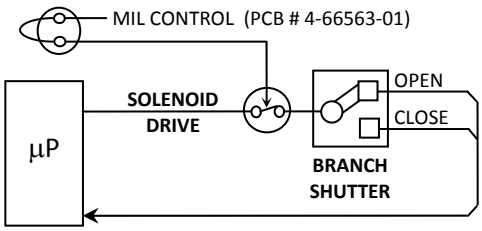

MIL circuit implemented

MIL Connector keying

To further ensure Laser Operator safety, each fiber interlock output connector is keyed (wired differently). This prevents the Laser Operator from accidentally firing the Laser into an open workstation that is incorrectly connected to the wrong Interlock connector. The Interlock connectors are wired as follows:

Multi-WS I/L Cable P/N	Output #	Wiring Connection					# Pins
		A	B	C	D	E	
4-66527-01	1	Red	Black	---	---	---	2-pin
4-66527-02	2	Red	Black	NC	NC	NC	5-pin
4-66527-03	3	Red	NC	Black	NC	NC	5-pin
4-66527-04	4	Red	NC	NC	Black	NC	5-pin
4-66527-05	5	Red	NC	NC	NC	Black	5-pin
4-66527-06	6	NC	Red	Black	NC	NC	5-pin

NC = No connection (*do not terminate wire on this terminal*)

2-Pin Connector

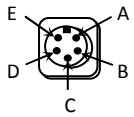

5-pin Connector

Fiber Interlock Output Locations

The locations of the Interlock Outputs are noted below. The wiring for each of these interlock connector locations is listed in the table above.

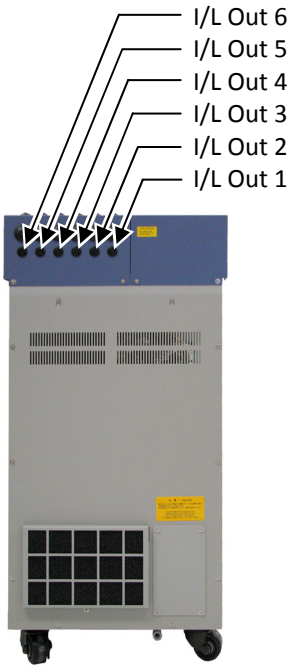

LW50A(C)(E)-150A(E)

LW300A(H)(E)-400A(E)

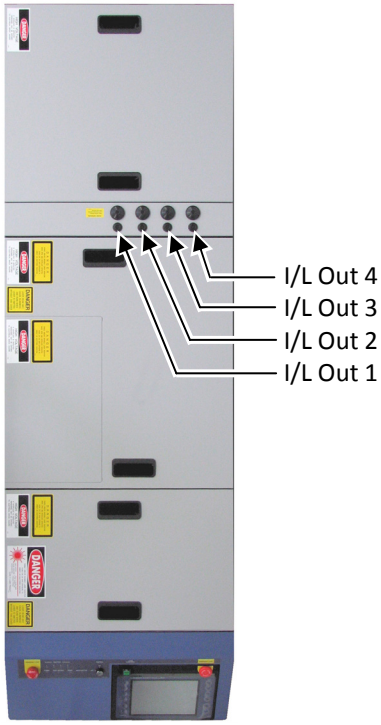

LW500A(E)-600A(E)

MIL Configuration + Integration (PCB # 4-66563-01)

When the **MIL** circuit is implemented, the "Remote Interlock Connector" on the front panel of the Laser is not used (but must be terminated with a loop-back connector for proper operation). Instead of using the single "Remote Interlock Connector", there will be individual *Fiber Interlock Connectors* for each Optical Fiber located on the rear panel of the Laser.

In order to properly configure the **MIL** circuit, all *Fiber Interlock Connectors* should be terminated (external to the Laser). Termination is based on the number of Workstations. For any group of optical fibers that route inside a Workstation, all of the corresponding *Fiber Interlock Connectors* should be wired in parallel. When all *Fiber Interlock Connectors* are wired up, independent protection for each Branch Shutter is achieved. Since the connectors are tied in parallel, the Workstation Interlock can be connected to any of the *Fiber Interlock Connectors* (that are tied in parallel).

Example 1: In the example below, the MIL circuit is added to a Laser configured with a 2E2T configuration (2 sets of 2-Energy Shared Outputs designed for 2 workstations). In this example, there are two groups of Fiber Interlock Connectors that are tied in parallel. The Interlock for W/S # 1 can be tied to either connector I/L-1 or I/L-2. Likewise, the Interlock for W/S # 2 can be tied to either connector I/L-3 or I/L-4.

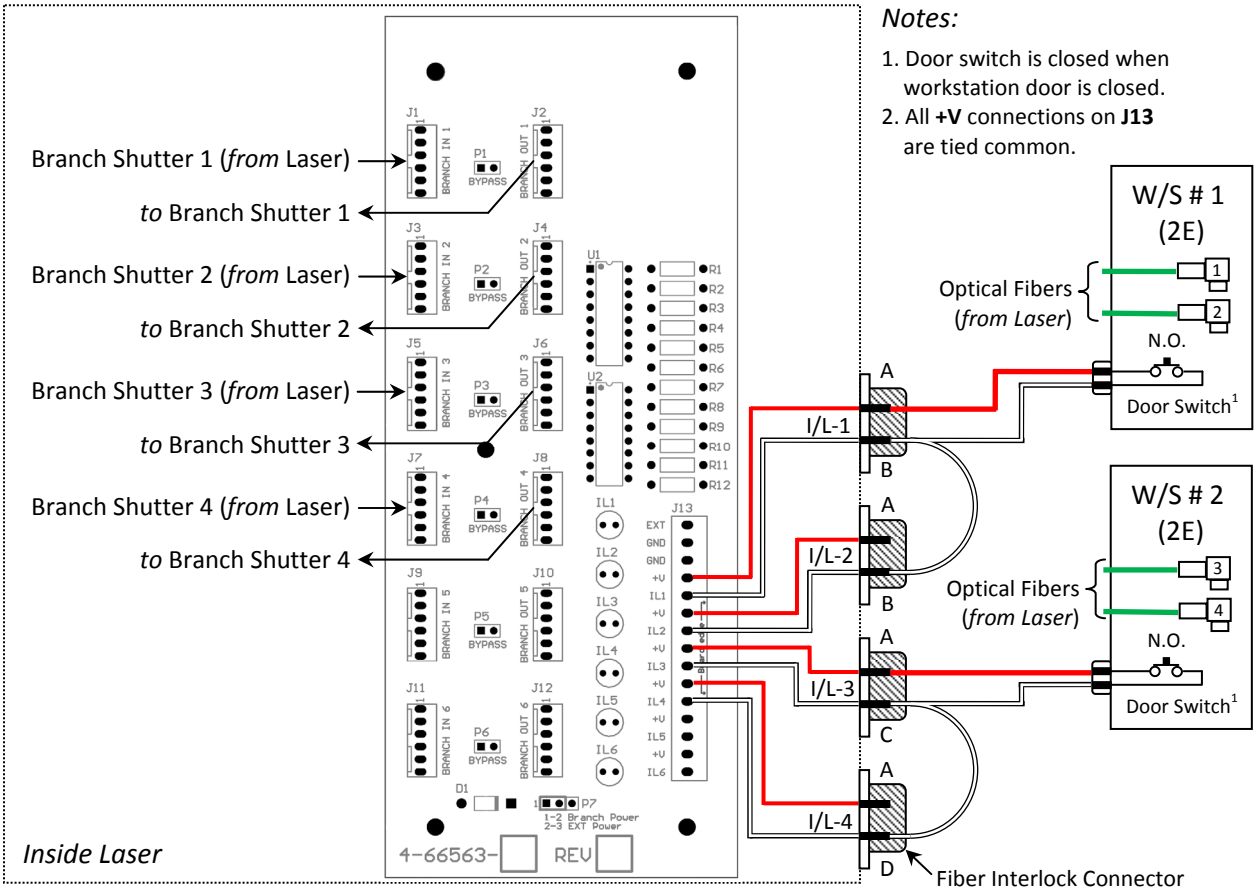

Example 2: In the example below, the MIL circuit is added to an Independently Controlled Laser with a 3E-1T configuration (a Single output + 3-Energy Shared Outputs designed for two workstations). In this example, the Interlock for W/S # 1 is tied to I/L-1 and the Interlock for W/S # 2 can be tied to either connector; I/L-2, I/L-3 or I/L-4.

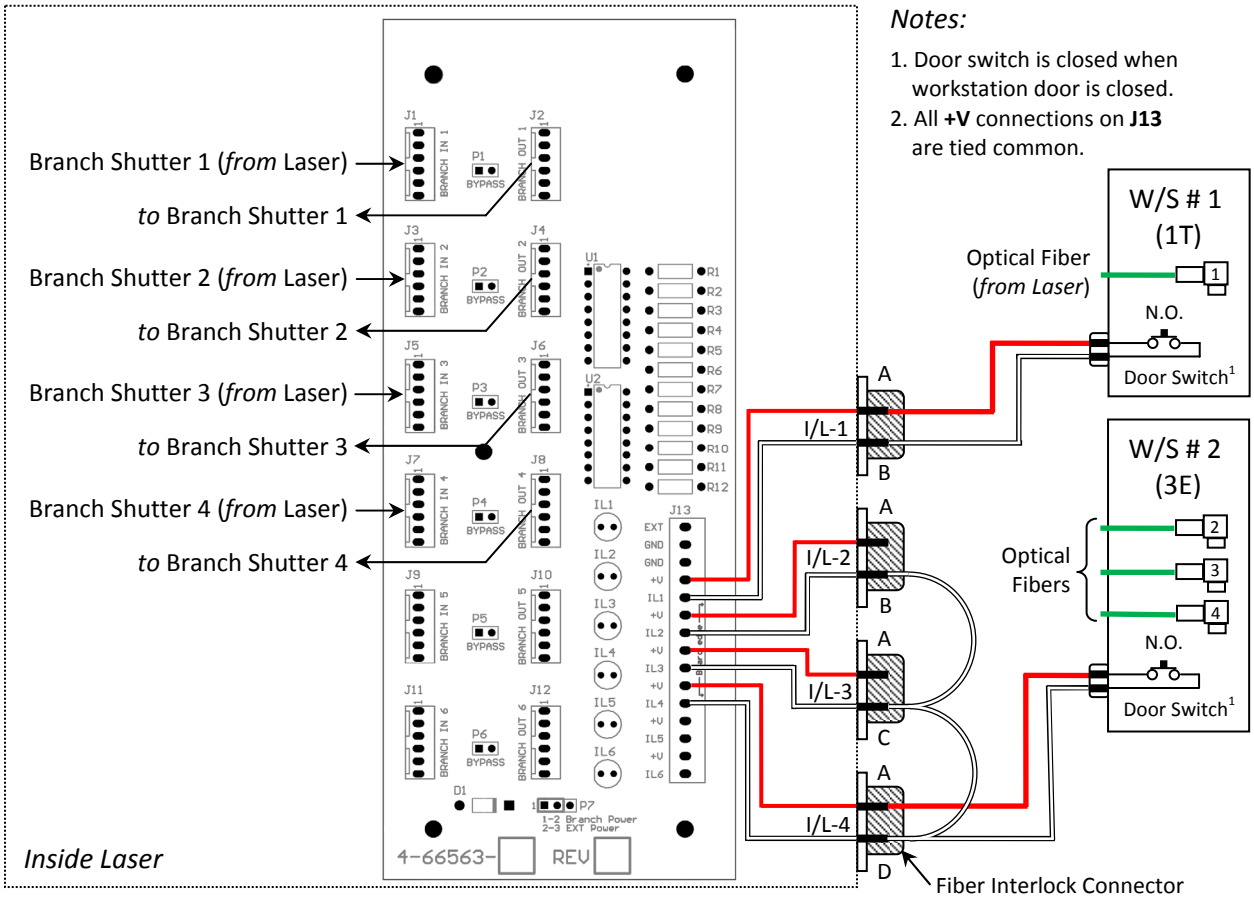

External Biasing – P7

In order for the **MIL** circuit to work properly, all Fiber Interlock inputs must be properly biased. In the examples above, all biasing is done internal to the Laser.

If the **MIL** circuit will be interfaced to an external circuit (such as a PLC), it can be biased with the same power supply as the external circuit. By default jumper P7 is configured for **Branch Power** (internal) biasing. To use external biasing, set jumper P7 to **EXT Power** and connect the external Power Supply to the J13 connector as shown on the right. All connections to the *Fiber Interlock Connectors* are the same. This feature only exists on the 4-66563-01 **MIL** PCB.

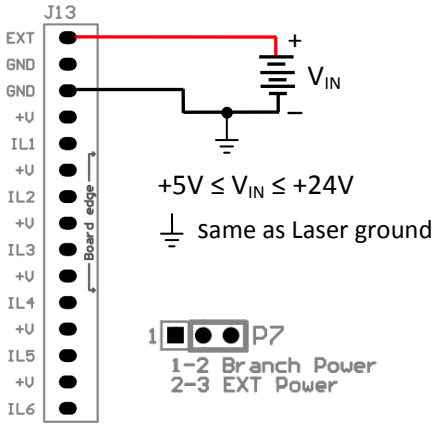

Section II. Fiber Breakage Detection (FBD) - (8-620-xxxx-xy)

The **FBD** PCB is designed with two functions; (1) Fiber Breakage Detect (**FDB**) and (2) Multi-Workstation Interlock (**MIL**). Depending on the options ordered, it is possible that sections of the **FBD** circuit will not be used. Any safety feature can be added at a later date.

FBD + MIL Configuration:

The **FBD** + **MIL** feature is user-configurable. The basic configuration is as follows:

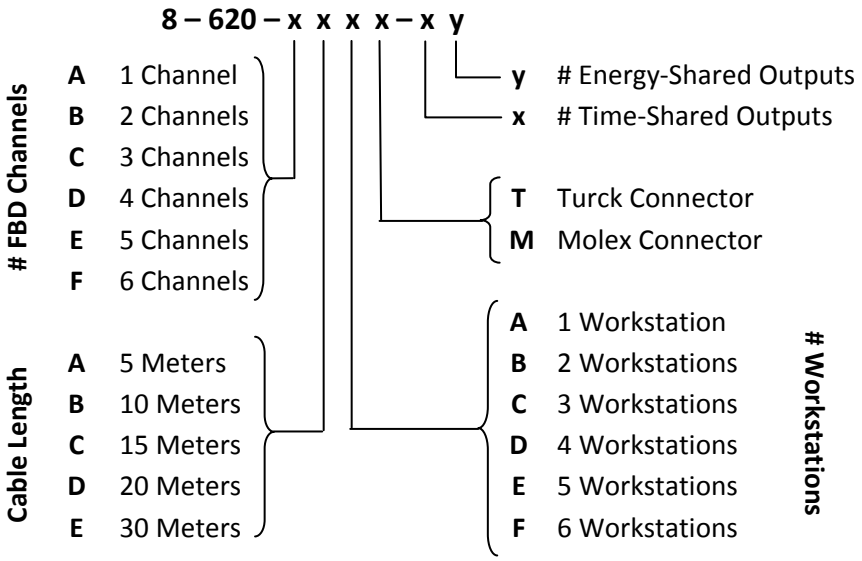

 # FBD Channels: This option defines the number of Optical Fibers connected to the Laser. Each Fiber Output must have its own **FBD** channel. The maximum number of Optical Fibers allowed is Laser dependent:

LW50A(C)(E)/70A(C)(E)/150A(E) - 6 outputs maximum
LW300A(H)(E)/400A(E)/500A(E)/600A(E) - 4 outputs maximum

Cable Length: This option defines the length of cable that routes between the Laser and Focus Head **FBD** receiver. The length is typically ≥ Optical Fiber length and routes alongside the Optical Fiber. One end of the cable terminates inside the Laser on the **FBD** PCB and the other end connects to the **FBD** receiver mounted on the Focus Head.

 # Workstations: This option is used to specify the number of Workstations connected to the Laser. A stock Laser is equipped with a single Interlock channel, suitable for connecting to a single Workstation.

Connector: This option defines the connector used on the interconnecting cable and **FBD** receiver. Unless otherwise specified, the Turck connector will be used.

Turck (T) - Dust sealed circular connectors used in dirty environments
Molex (M) - Simple rectangular connector(s)

Outputs: Number of Time-Shared and Energy-shared Laser Outputs.

How FBD Works

Whenever a Laser is given the command to "fire", the Laser first checks the status of all safety features before firing the Laser. One of the safety checks is to determine the status of the internal *Branch Shutter(s)*. Each *Branch Shutter* provides a hardware feedback signal to show its open/close condition. As long as the open/close status in the microprocessor (µP) is the same as the hardware feedback signal, the safety check will pass.

An independent light source (700nm) is transmitted down each *Optical Fiber*. The **FBD** circuit controls the solenoid drive signal to the *Branch Shutter(s)* such that if the independent light source is not detected at the other end of the *Optical Fiber* (at the Focus Head), the *Branch Shutter* will close. Then, if the Laser is given a "fire" command, the open/close status in the µP will not match the hardware feedback signal and the Laser will not fire. The ***FBD** Transmitter* is located inside the Laser behind each Branch Shutter and the ***FBD** Receiver* is located on each Focus Head. A simplified block diagram is shown below for convenience:

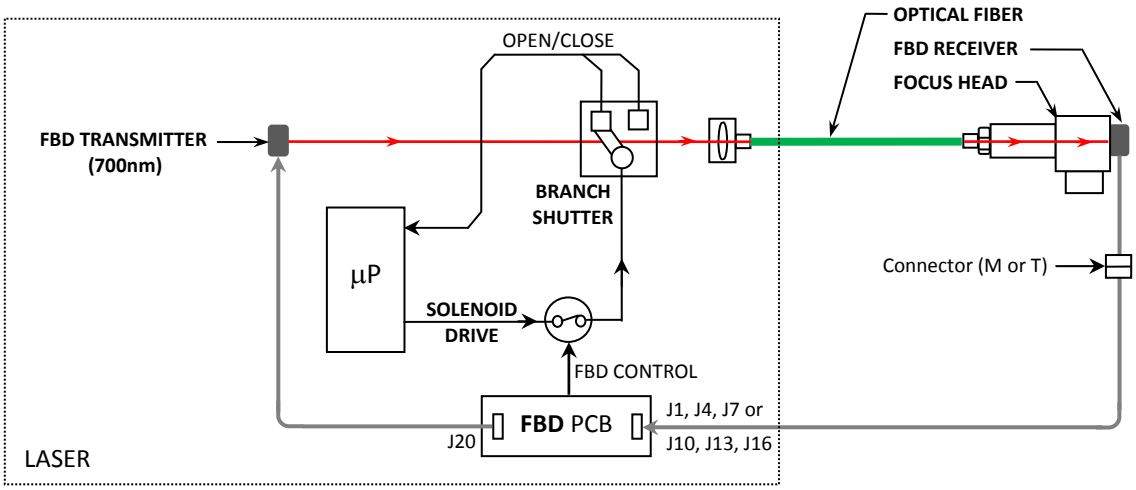

FBD Configuration (PCB # 4-67003-01):

There is an independent **FBD** channel (transmitter/receiver) for each *Optical Fiber* that is installed in the Laser. Any unused **FBD** channel should be left unconnected. Even though the **MIL** function is separate from the **FBD** function, the circuits are co-dependent. Therefore all corresponding **MIL** inputs must be terminated, whether this option is used or not.

If the **MIL** function *is* used, refer to ***Section I*** for details on how to interface to this circuit.

If the **MIL** function *is not* used, the inputs must be terminated (add a jumper between pin-1 to pin-2, then pin-3 to pin-4, etc.) as shown on the right.

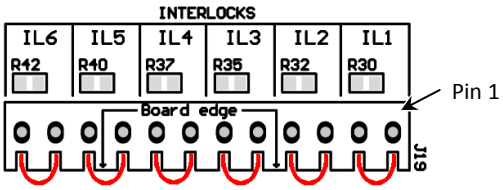

Example 3: In the example below, the **FBD** circuit is added to a Laser configured with 3 energy-shared outputs (3E) and a single Workstation. In this example, the Multi-Workstation feature is not used, so all unused terminal block inputs on J19 are terminated as described above. The Workstation Interlock Door Switch is connected directly to the *Remote Interlock Connector* (located on the front panel of the Laser).

The output of each **FBD** circuit is connected between the receiver (mounted on the Focus Head) and the **FBD** PCB (AMYA # 4-67003-01). In this example, each *Optical Fiber* is monitored for connectivity and the workstation interlock door switch circuit will prevent the *Laser* from being fired when the *Workstation* door is open.

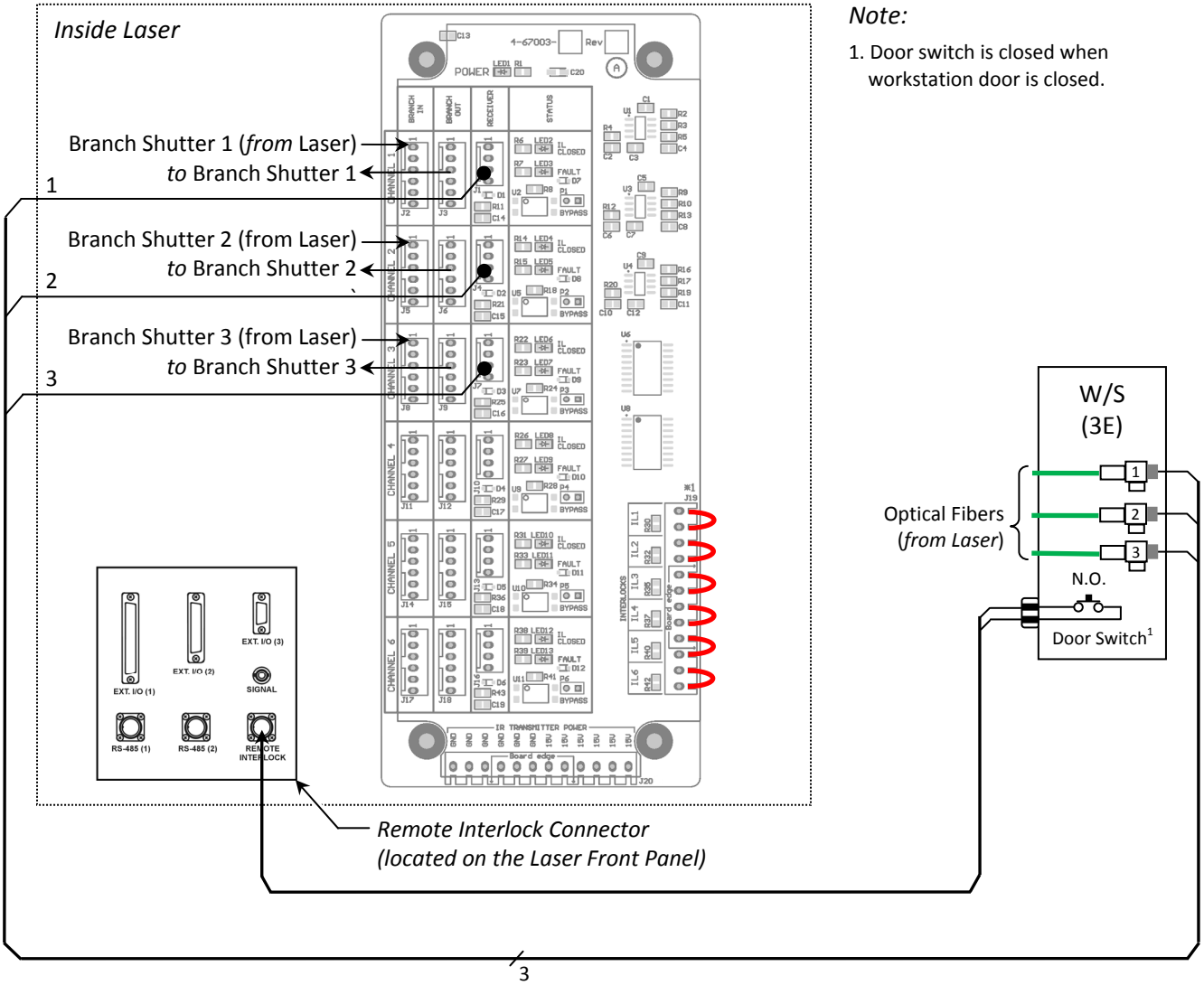

Note:

1. Door switch is closed when workstation door is closed.

Example 4: In the example below, the **FBD** circuit is added to a Laser configured with a 2E2T configuration (2 sets of 2-Energy Shared Outputs designed for two workstations). In this example, there are two groups of Fiber Interlock Connectors that are tied in parallel. The Interlock for W/S # 1 can be tied to either I/L-1 or I/L-2. Likewise, the Interlock for W/S # 2 can be tied to either connector I/L-3 or I/L-4.

The output of each **FBD** Receiver is connected between the receiver (mounted on the Focus Head) and the **FBD** PCB (AMYA # 4-67003-01). In this example, each *Optical Fiber* is monitored for connectivity and each Workstation is protected such that the *Laser* won't fire into an open Workstation.

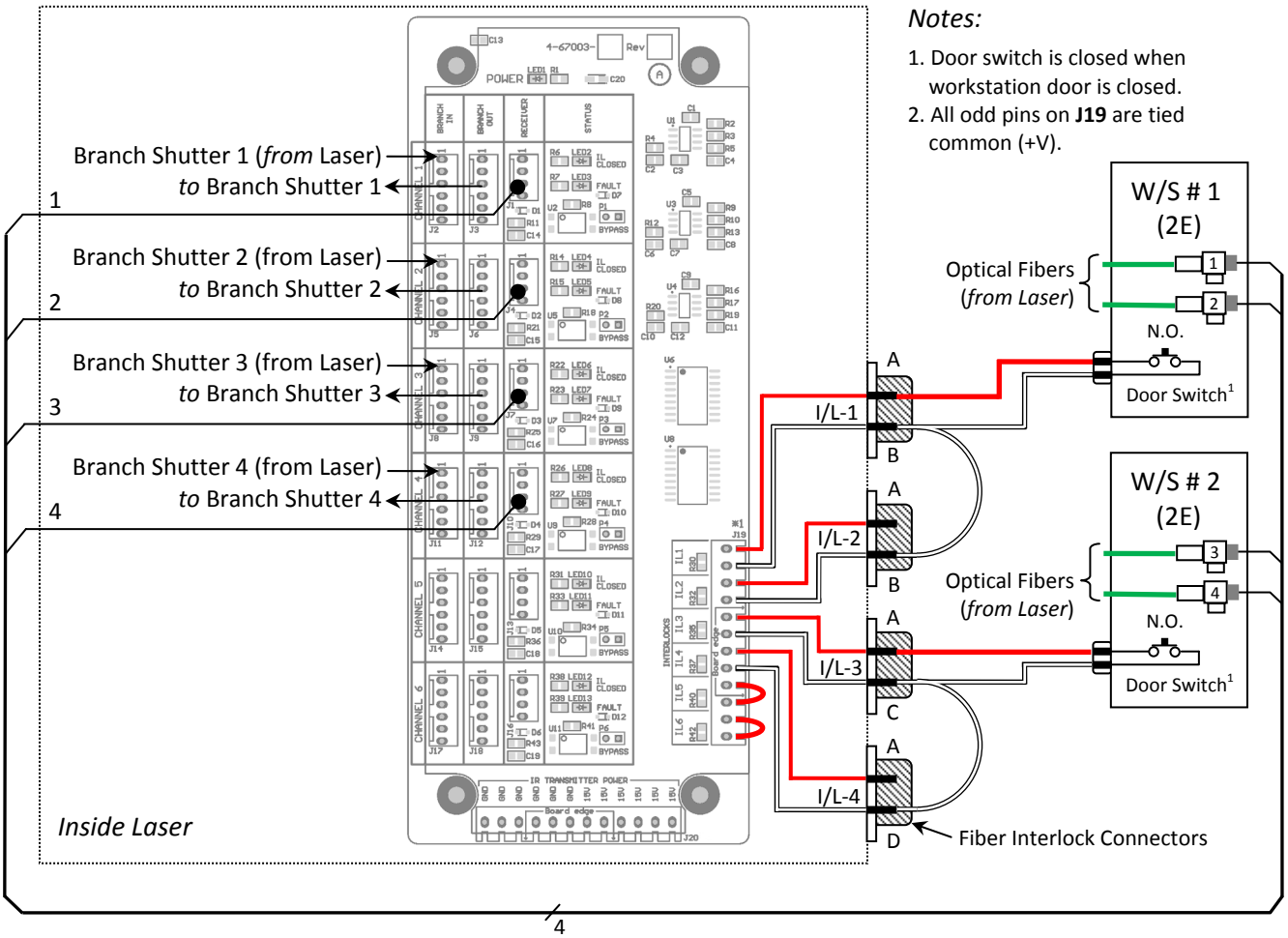

FBD Adjustment:

If the Laser is factory equipped with the **FBD** PCB Kit, no adjustment is necessary. Do not re-adjust unless the **FBD** circuitry is not working properly. The **MIL** circuitry does not require any adjustment. This procedure assumes the Laser is configured and factory aligned. Do not try to align the **FBD** circuitry unless the Laser is properly aligned.

1. Remove the **FBD** Receiver on the Focus Head. Replace the **FBD** receiver with the 4-66995-01 Alignment Sensor Tool and secure with M3 screws.
2. Place an Ophir # PD300-SH sensor inside the 4-66995-01 Alignment Tool and connect to either an Ophir Laserstar or Ophir NOVA display. Set Ophir controller to measure a wavelength of 700nm (visible red) and nanowatts (nW) of power.
3. With the Laser powered on, open the appropriate Branch Shutter (Guide Laser **OFF**).
4. Adjust the position of the **FBD** transmitter inside the Laser to maximize the power reading on the Ophir measurement equipment.

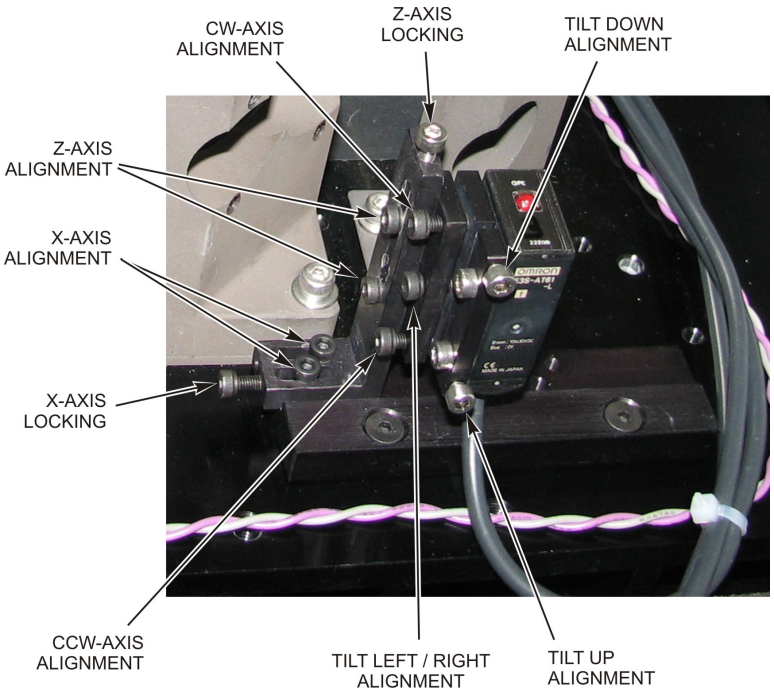

5. Remove the 4-66995-01 Alignment Tool and reinstall the **FBD** receiver. Visually center the receiver over the open hole on the Focus Head. Secure the receiver with M3 screws.
6. Verify the receiver function switch is set to "**L**" for Light and the **Sensitivity** is set to *Maximum.* The Green LED indicates power and the Red LED indicates the transmitted signal is detected.
7. With the Branch Shutter open, verify that the Red status LED lights on the receiver indicates that the **FBD** circuit is working properly. Repeat process for remaining Laser Output Branches.

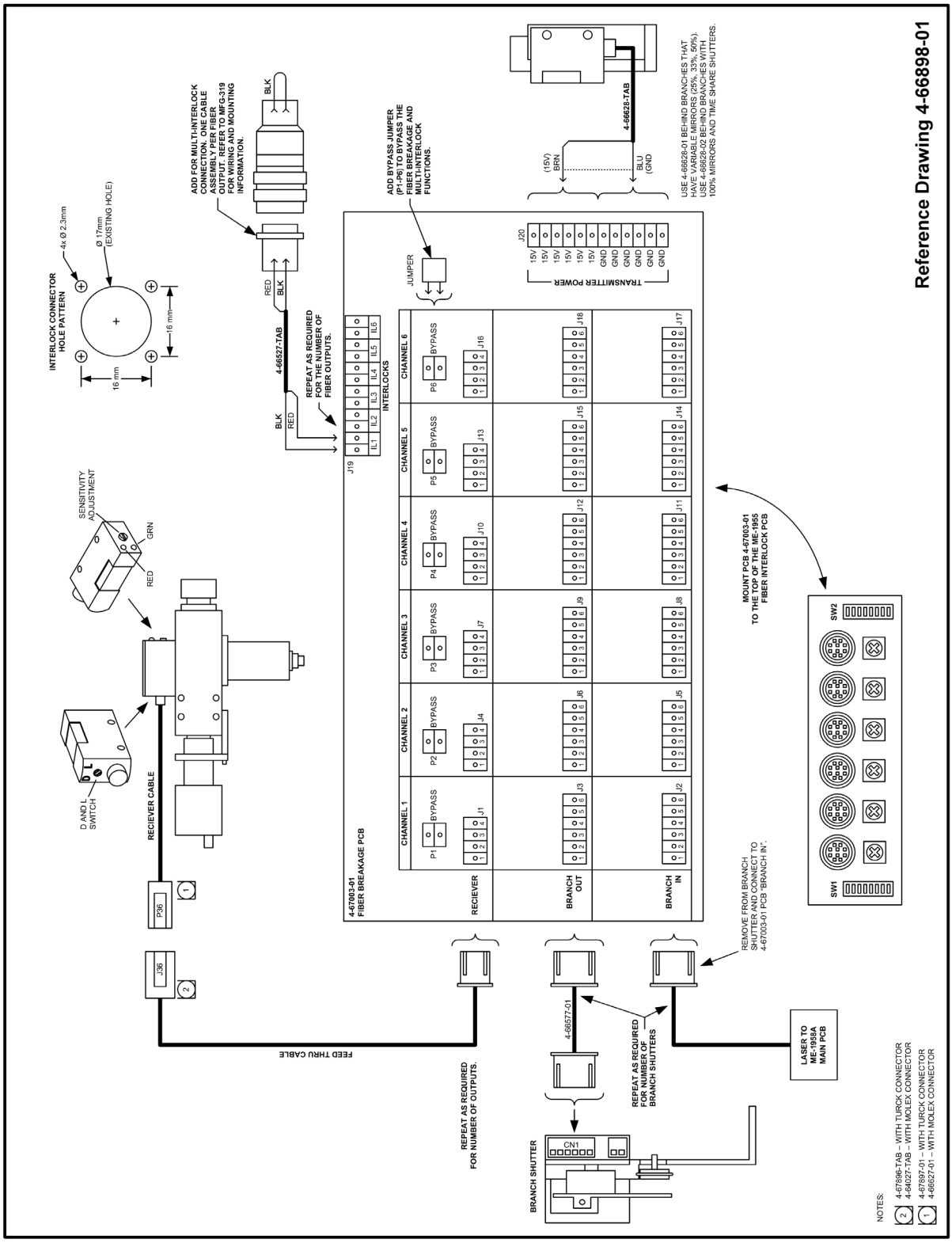
Reference Drawing 4-66898-01
INTERLOCK CONNECTOR HOLE PATTERN
4x Ø 2.3mm
Ø 17mm (EXISTING HOLE)
16 mm
16 mm
ADD FOR MULTI-INTERLOCK CONNECTION. ONE CABLE ASSEMBLY PER FIBER OUTPUT. REFER TO MFG-319 FOR WIRING AND MOUNTING INFORMATION.
BLK
RED
BLK
4-66527-TAB
BLK
RED
REPEAT AS REQUIRED FOR THE NUMBER OF FIBER OUTPUTS.
ADD BYPASS JUMPER (P1-P6) TO BYPASS THE FIBER BREAKAGE AND MULTI-INTERLOCK FUNCTIONS.
JUMPER
4-66628-TAB
(15V) BRN
BLU (GND)
USE 4-66628-01 BEHIND BRANCHES THAT HAVE VARIABLE MIRRORS (25%, 37%, 50%).
USE 4-66628-02 BEHIND BRANCHES WITH 100% MIRRORS AND TIME SHARE SHUTTERS.
J20
15V 15V 15V 15V 15V 15V GND GND GND GND GND GND
TRANSMITTER POWER
J19
IL1 IL2 IL3 IL4 IL5 IL6
INTERLOCKS
4-67003-01 FIBER BREAKAGE PCB
CHANNEL 1
CHANNEL 2
CHANNEL 3
CHANNEL 4
CHANNEL 5
CHANNEL 6
P1 BYPASS
P2 BYPASS
P3 BYPASS
P4 BYPASS
P5 BYPASS
P6 BYPASS
J1 J4 J7 J10 J13 J16
J3 J6 J9 J12 J15 J18
J2 J5 J8 J11 J14 J17
RECIEVER
BRANCH OUT
BRANCH IN
SENSITIVITY ADJUSTMENT
GRN
RED
D AND L SWITCH
L D
RECIEVER CABLE
P96
J36
FEED THRU CABLE
MOUNT PCB 4-67003-01 TO THE TOP OF THE ME-1955 FIBER INTERLOCK PCB
SW1
SW2
REMOVE FROM BRANCH SHUTTER AND CONNECT TO 4-67003-01 PCB "BRANCH IN".
4-66577-01
REPEAT AS REQUIRED FOR NUMBER OF OUTPUTS.
REPEAT AS REQUIRED FOR NUMBER OF BRANCH SHUTTERS
LASER TO ME-1958A MAIN PCB
BRANCH SHUTTER
CN1
NOTES:
2 4-67896-TAB – WITH TURCK CONNECTOR
4-84027-TAB – WITH MOLEX CONNECTOR
1 4-67897-01 – WITH TURCK CONNECTOR
4-66627-01 – WITH MOLEX CONNECTOR

Section III. Testing

If the **FBD** / **MIL** circuit is newly configured or needs to be tested for functionality, follow the appropriate test procedure below for circuit verification.

FBD testing – 4-67003-01

1. Verify all Optical Fibers are clean and free of contamination and then connect all Optical Fibers between the Laser and Focus Head(s).
2. Power on the Laser and Workstation (if applicable). If connected to a Workstation, be sure to bypass the Door Interlock switch for the remainder of the **FBD** testing. This will allow the Workstation door to be opened, for access to the Focus Head.
3. Verify no errors appear on the front panel of the Laser. Correct all problems before continuing with this procedure.
4. To test a specific fiber, open its corresponding Branch Shutter.
5. Disconnect the Optical Fiber from the Focus Head and verify the Branch Shutter closes. If you cannot visually see the Branch Shutters, monitor the status lights on the front of the Laser. When open, the status indicators will be **ON** (and **OFF** when closed)**.**
6. If the Branch Shutter does not close, refer to ***Section IV, Troubleshooting*** and use the LED's to determine the status of the FBD circuit. If you cannot get the FBD circuit to function properly, it may be necessary to perform an FBD adjustment (as described in ***Section II***)
7. Repeat test for each of the remaining Optical Fibers.

MIL testing (stand-alone Laser, no Workstation) – 4-67003-01 or 4-66563-01

1. Power on the Laser. Verify no errors appear on the front panel of the Laser. Correct all problems before continuing with this procedure.
2. Open *Branch Shutter 1* and then remove all Fiber Interlock Connectors, except for Branch 1. Verify that *Branch Shutter 1* remains open. Replace all Fiber Interlock Connectors.
3. Remove the Fiber Interlock Connector from Branch 1 and verify that *Branch Shutter 1* closes. If you cannot visually see the Branch Shutters, monitor the status lights on the front of the Laser. When open, the status indicators will be **ON** (and **OFF** when closed). Replace Fiber Interlock Connector when finished.
4. Repeat this process for the remaining Branch Shutters by verifying that the appropriate Branch Shutter closes when its corresponding Fiber Interlock Connector is removed.

   Note: For outputs that are tied in parallel, all common Branch Shutters should be tested at the same time. Open all Branch Shutters that are tied in parallel, and verify they all close when the Fiber Interlock connector is removed.

MIL testing (when connected to Workstation(s)) – 4-67003-01 or 4-66563-01

1. If the Laser is also equipped with the **FBD** circuit, verify that the **FBD** function operates correctly as outlined above and leave all Optical Fibers connected to their respective Focus Heads for the remainder of this test.
2. Verify all Interlock connections that route between the Laser and Workstation.
3. Power on the Laser and Workstation. Verify no errors appear on the front panel of the Laser. Correct all problems before continuing with this procedure.
4. Verify the Workstation door is closed.
5. For any given Workstation, identify which Optical Fibers route into the workstation and then open all of the corresponding Branch Shutters.
6. Open the Workstation door and verify that all of the corresponding Branch Shutter(s) close. If you cannot visually see the Branch Shutters, monitor the status lights on the front of the Laser. When open, the status indicators will be **ON** (and **OFF** when closed).

   Note: When any Fiber Interlock Connector is tied in parallel with another Fiber Interlock Connector, these common Branch Shutters must be tested together.

Section IV. Troubleshooting

Error	Solution
Shutter faults at power-up	All Interlocks must be closed during power-on self-test.
Shutter fault during operation	Close all corresponding Branch Shutters for any given Workstation before opening the Workstation Door.
Cannot get **FBD** or **MIL** to work	Check all circuit connections and use status LED's on PCB to troubleshoot as described below.

There are status LED's located on both the **FBD** PCB (4-67003-01) and **MIL** PCB (4-66563-01). These status LED's can be used to determine the health of all configured channels. Whenever a Branch Shutter problem occurs, check the status LED's to determine which Channel is producing the problem.

MIL PCB – AMYA # 4-66563-01

The Red LED's (IL1, IL2, IL3, IL4, IL5, IL6) show the status of the Fiber Interlock Connectors. When the Interlock is closed, these LED's will light.

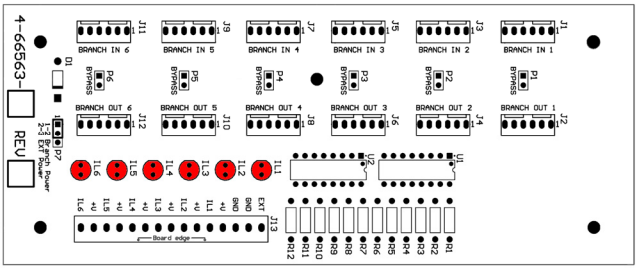

FBD PCB – AMYA # 4-67003-01

The Green LED's (LED2, LED4, LED6, LED8, LED10, LED12) show the status of the Fiber Interlock Connectors (**MIL** function). When the Interlock is closed, these LED's will light.

The Red LED's (LED3, LED5, LED7, LED9, LED11, LED13) show the status of the Optical Fiber. If any of these LED's is lit, that means that the Independent Light Source is not detected at the end of the Optical Fiber for that specific channel. Normally these LED's will be off.

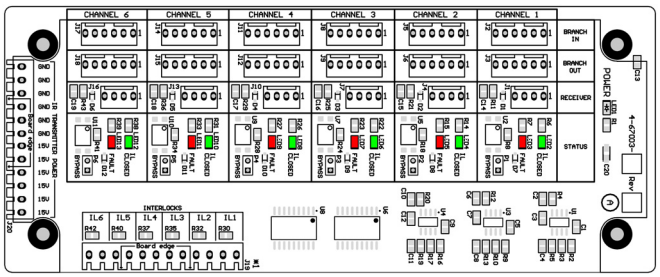

In the event there is a problem with a single channel or the Laser will not power-up, simply install a temporary 2-position jumper on the appropriate Bypass Header (P1 – P6) and troubleshoot the circuit to determine the cause of the fault. The most common failure is a bad Workstation door switch, bad interlock connection or improper configuration.

Section V. Spare Parts

In the event a **FBD** or **MIL** circuit needs replacement parts, please refer to the table below. Refer to the System interconnect diagram in this document for more details.

Item	Description	AMYA Pt #
MIL PCB	Multi-Workstation Interlock PCB	4-66563-01
FBD PCB	Fiber Breakage Detect + Multi-Workstation I/L PCB	4-67003-01
Branch Shutter Cable	Routes between Branch Shutter and **MIL**/**FBD** PCB	4-66577-01

I/L Cable Assy – Output # 1	Fiber Interlock Connector Assembly, Panel Mount	4-66527-01
I/L Cable Assy – Output # 2	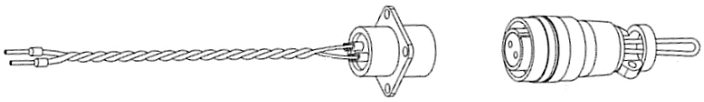	4-66527-02
I/L Cable Assy – Output # 3		4-66527-03
I/L Cable Assy – Output # 4		4-66527-04
I/L Cable Assy – Output # 5		4-66527-05
I/L Cable Assy – Output # 6		4-66527-06

Transmitter Assembly + mirror	Transmitter Assembly + IR mirror, mounts inside Laser (used behind variable mirrors, 25%, 33%, 50%) 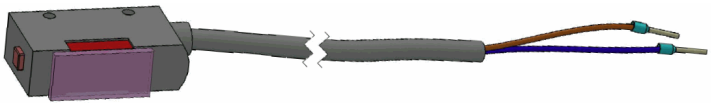	4-66628-01
Transmitter Assembly	Transmitter Assembly, mounts inside Laser (used by 100% mirrors and Time-Shared shutters) 	4-66628-02
Transmitter Adjustment Bracket	Bracket Assembly for Independent Light Source (mounts inside Laser) 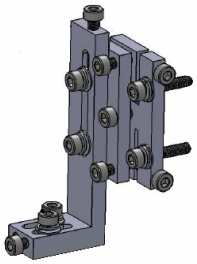	4-66952-01

Spare Parts (Continued)

Item	Description	AMYA Pt #
Receiver Assembly with Turck connector	Receiver Assembly with Turck Connector, mounts on Focus Head 	4-67897-01
Receiver Cable, Turck, 5m	Fiber Breakage Receiver Cable. Available in 5 lengths; 5m, 10m, 15m, 20m, 30m Routes between Receiver (on Focus Head) and **MIL**/**FBD** PCB 	4-67896-01
Receiver Cable, Turck, 10m		4-67896-04
Receiver Cable, Turck, 15m		4-67896-05
Receiver Cable, Turck, 20m		4-67896-02
Receiver Cable, Turck, 30m		4-67896-03

Receiver Assembly with Molex connector	Receiver Assembly with Molex Connector mounts on Focus Head 	4-66627-01
Receiver Cable, Molex, 5m	Fiber Breakage Receiver Cable. Available in 5 lengths; 5m, 10m, 15m, 20m, 30m Routes between Receiver (on Focus Head) and **MIL**/**FBD** PCB 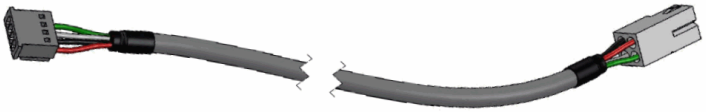	4-64027-01
Receiver Cable, Molex, 10m		4-64027-04
Receiver Cable, Molex, 15m		4-64027-05
Receiver Cable, Molex, 20m		4-64027-02
Receiver Cable, Molex, 30m		4-64027-03